

2027 FORMULA ONE POWERBOAT CHAMPIONSHIP
GENERAL RACING GUIDELINES

2027 FORMULA ONE POWERBOAT CHAMPIONSHIP RACING GUIDELINES

SPIRIT AND INTENT

T & J Motorsports, LLC d/b/a Formula One Powerboat Championship ("F1PC") is a world-renowned sanctioning body dedicated to the pursuit of speed, technical innovation, and fair competition. The rules and regulations outlined in this rulebook are designed to ensure the orderly conduct of all Formula One Powerboat Championship ("F1PC") events while establishing minimum standards for participation. These guidelines serve as a framework for the fair and consistent administration of the sport.

Guidelines offered in this rulebook are subject to the term "spirit and intent" and apply to the technical aspects of powerboat racing as well as to the actions of drivers, crew members, team owners, family members, and anyone associated with a team. It is expected that all participants will adhere to the spirit and intent of these rules. These are guidelines for fair and equitable competition. They are not the basis to "read between the lines" in order to circumvent the intent. **If you are the type of person that is intent on finding loopholes, then it is imperative that you reevaluate your association with F1PC.** The "spirit and intent" clause allows our Race Director to make decisions and resolve disputes in a timely manner. If you are contemplating a technical undertaking that is not directly addressed in these rules, please contact the F1PC office to make sure it is legal and will be allowed. The race committee reserves the right to interpret the intention of anyone that violates these rules and impose appropriate penalties.

The absence of a specific rule, regulation, or prohibition does not imply permission. These rules are in addition to (i) all other rules, regulations, memoranda, resolutions, policies, procedures, guidelines, interpretations, and directives of F1PC, including membership terms and conditions, license terms and conditions, track rules, and any sponsorship agreements (ii) all applicable laws, codes, ordinances, orders, policies, rules, regulations and requirements of any applicable governmental authority, and (iii) and any applicable permits, approvals, consents or licenses related to or required for any event. In the event of any conflict or inconsistency between these rules and the provisions of any other F1PC rule, F1PC has sole and absolute discretion to resolve such conflict or inconsistency.

Any situation not specifically covered in these rules will be addressed at the discretion of the F1PC officials. The F1PC race director, managing director or their officials shall be empowered to make changes to any rule or specification contained within. Furthermore, the F1PC may modify or impose further rules or specifications as necessary for the fair, competitive, and safe conduct of events.

These rules shall govern all F1PC sanctioned events and, by participation in these events, all entrants are deemed to have understood and accept these rules.

This rulebook and all disputes arising from participation in F1PC-sanctioned events shall be governed by the laws of the State of Missouri, without regard to conflict-of-law principles. Venue for any legal action shall lie exclusively in the state or federal courts located within Missouri.

DISCLAIMER

No express or implied warranty of safety shall result from publication of, or compliance with, these rules and regulations. They are intended as a guide for the conduct of the sport and are in no way a guarantee against injury or death to participants, spectators, or others.

ASSUMPTION OF RISK AND RELEASE

RACING IS AN INHERENTLY DANGEROUS SPORT. Each participant assumes that risk when he or she participates in an IHRA event. Participation in IHRA F1PC events has a significant risk of permanent injury or death that cannot be fully mitigated or eliminated. Participants are required to advise their family members of this risk. Any person who (i) participates in a racing event (as a driver or other on-track participant) or (ii) attends a racing event as a spectator, fan, visitor, or otherwise ("Participant"), understands and acknowledges that there are certain risks involved, including, but not limited to, concussion, serious injury, death or permanent disability, contact or collision with other persons, vehicles, or objects, head injury, spine injury, injury to the muscular or skeletal systems, injury to internal organs, scratches, bruises, contusions, strains, sprains, fractures, verbal abuse, loss and/or damage to sight, loss and/or damage to teeth, loss and/or damage to hearing, paralysis, inadequate or negligent first aid or emergency measures, weather-related hazards, and natural hazards. The foregoing risks may arise from, among other things, high-speed driving, collisions, mechanical failures, track/course conditions, and the actions of the drivers. Participant acknowledges and agrees that he or she is voluntarily participating in such activities or attending such events with the knowledge of the dangers involved and agrees to assume and accept all risks of such participation or attendance.

Any Participant is required to sign IHRA and/or track waivers before entering the pit area and/or competitor's area. In exchange for being allowed to participate in or attend a racing event, on behalf of themselves and each of the other Releasors (as defined below), Participant hereby releases and agrees not to sue IHRA and each of its respective affiliates and employees, officers, directors, direct and indirect owners, sub-contractors, sponsors, business partners and agents, and all other participants, operators, vendors, agencies, sponsors, advertisers, and owners and lessees of premises used in connection with or related to any IHRA racing related event or activity (collectively, the "Releasees") from or for, as applicable, all present and future liabilities, claims, and causes of action of any kind, whether at law or in equity, that may be made by the Participant or the Participant's family, estate, heirs, or assigns (collectively, the "Releasors") arising in any way as a result of or in connection with the Participant's participation in a racing event or associated activities, attendance at an IHRA event or associated activities, including but not limited to actions for property damage, personal injury, or wrongful death. Participant understands and agrees that the Releasees are not responsible for any death, injury, or property damage arising out of participation in the racing event, EVEN IF CAUSED BY THEIR OWN NEGLIGENCE.

These provisions are intended to be interpreted broadly to provide maximum protection to IHRA and its affiliated entities to the fullest extent permitted by law. If any provision of this rulebook is determined to be invalid, illegal, or unenforceable by a court or other authority of competent jurisdiction, such determination shall not affect the validity or enforceability of the remaining provisions. All remaining sections shall continue in full force and effect.

INDEMNIFICATION

Participant also agrees to defend, indemnify, and hold harmless Releasees for all liabilities, claims, damages, causes of action, costs, and expenses of any kind arising out of or in connection with the Participant's participation in any IHRA event or competition, attendance at any IHRA event, or any and all related activities. Participant understands that this release and indemnification is intended to be as broad and inclusive as permitted by the laws in which the event or activity is taking place and agrees that if any portion of this release is invalid, the remainder will continue in full force and legal effect.

IHRA shall not be liable for any direct, indirect, incidental, special or consequential damages resulting from any and all demands, rights, and causes of action of whatever kind or nature, arising out of all known and unknown, foreseen and unforeseen, bodily and personal injuries, damage to property, and the consequences thereof, including any injury, damage, death or disability resulting from entry into the track premises, attendance at an event, or participation in an event, including as a result of the negligence of IHRA or its affiliates. To the fullest extent permitted by law, IHRA's total liability for any claim arising from participation in an IHRA-sanctioned event shall not exceed the amount of entry fees paid by the Participant for the event giving rise to the claim.

Participant expressly waives all rights under Section 1542 of the Civil Code of the State of California, and under any and all similar laws of any jurisdiction. Participant acknowledges that Section 1542 of the Civil Code provides as follows:

> A GENERAL RELEASE DOES NOT EXTEND TO CLAIMS THAT THE CREDITOR OR RELEASING PARTY DOES NOT KNOW OR SUSPECT TO EXIST IN HIS OR HER FAVOR AT THE TIME OF EXECUTING THE RELEASE AND THAT, IF KNOWN BY HIM OR HER, WOULD HAVE MATERIALLY AFFECTED HIS OR HER SETTLEMENT WITH THE DEBTOR OR RELEASED PARTY.

Participant acknowledges, on behalf of itself and each of the other Releasors, that the foregoing waiver of the provisions of Section 1542 of the California Civil Code is a material term and condition of this Agreement. Participant, for itself and each of the other Releasors, expressly acknowledges that this waiver shall be given full force and effect in accordance with each and all of its express terms and provisions, including those terms and provisions relating to unknown and unsuspected claims, demands, and causes of action, if any, to the same effect as those terms and provisions relating to any other claims, demands, and causes of action hereinabove described. Participant further acknowledges, for itself and each of the other Releasors, that each is fully aware that they might hereafter discover facts or other information in addition to or different from those which they now know or believe to be true, with respect to the subject matter of the claims released in this Section. Nevertheless, the Releasors intend to hereby fully, finally, and forever settle and release all matters, disputes, differences, known or unknown, suspected or unsuspected, which might now exist or heretofore might exist in connection with such claims. The releases given herein shall be and remain in effect as a full and complete release notwithstanding the discovery or existence of any such additional or different facts or information.

2026 IHRA F1PC GENERAL RACING RULES

ENTRIES

1. Any Participant who wishes to compete in an IHRA F1PC sanctioned event must complete and sign an official IHRA F1PC entry blank, along with an insurance release waiver, and submit it to the Scorer before any testing or qualification can take place. IHRA F1PC encourages these Participants to complete an entry blank prior to the event via the IHRA F1PC website. All entrants must be a member in good standing of IHRA F1PC. All entrants agree to be bound by the rules and regulations of the IHRA F1PC, and to abide by the decisions of the officials. No entry shall be considered official until the driver and/or owner has displayed proof of his/her current IHRA F1PC racing membership and club membership cards (when required).

2. If any entrant deliberately files false or incorrect information on his/her entry blank, he/she may be disqualified from the respective event.

3. Persons wishing to compete in a IHRA F1PC sanctioned event, may purchase a SINGLE EVENT membership for the respective event for a maximum of 2 times per racing year. Upon the 3rd time a full membership must be purchased with the single event memberships cost being subtracted from the yearly full membership price.

4. It is at the IHRA F1PC discretion to accept or reject any entry.

5. If a Participant participates in an IHRA F1PC sanctioned event without having completed and properly submitted an official entry blank, the Participant is subject to all IHRA F1PC Rules, as well as all statements, releases, and obligations appearing in the official entry blank, just as if he/she had properly submitted a fully executed official entry blank.

6. Participant acknowledges and agrees that IHRA exclusively and in perpetuity owns and controls any and all rights to videotape, broadcast, telecast, film, exhibit, distribute, photograph, exploit, record, print, or otherwise reproduce, and any and all rights to authorize others to do so, any film, audio, depiction, audiovisual, video, image, statistic, data (of any kind), photo, or sound arising from, related to, any IHRA F1PC event or other IHRA event (the "Works") in any manner whatsoever, alone or in composite and/or conjunction with other materials, in any and all media, whether now known or hereafter devised ("Media"), in or by any manner, method, or device (whether now known or hereafter devised), and all other rights, privileges, benefits, matters, and things incident to or arising out of all or any of the foregoing, including, without limitation, for any and all commercial purposes, including for purposes of advertising and promoting IHRA. Participant hereby grants to IHRA and the other Releasees (defined below) the exclusive, perpetual, royalty-free, irrevocable, fully paid-up, worldwide right to use, exhibit, edit, disseminate, display, reproduce, print, publish, publicly perform, and make any other uses of Participant's image, name, sobriquet, marks, logos, voice, movements, gestures, actions, persona, signature, likeness, uniform, biomaterial, biographical material, and other indicia

and attributes of Participants, in any manner whatsoever, alone or in composite and/or conjunction with any other materials, on, via, or through any and all Media, in connection with, related to, or for any purpose of: (i) any of the rights to the Works described in the foregoing paragraph; (ii) any advertising, promotion, publicity, operation, or exploitation of Participants or an event; and (iii) on the IHRA website in connection with any postings of rosters, scorings, or racing stories.

DRIVERS' MEETING

1. It is mandatory that all registered drivers and their crew chief(s) attend a drivers' meeting prior to the start of racing. The Referee must call roll to verify the presence of each contestant. The Referee reserves the right to excuse any contestant from the drivers' meeting due to extenuating circumstances and with prior permission. Drivers may be subject to penalties for failing to attend the drivers' meeting.

2. The Race Committee may change the racecourse or amend the instructions, provided notice of such alteration is given at the drivers' meeting.

3. The Race Committee shall adhere to the racing schedule as advertised unless some real emergency, such as adverse weather, necessitates a postponement. The Race Committee should publicly announce all postponements as far in advance as possible.

4. The question of how many participants in each class shall be inspected, shall be left to the discretion of the Referee and/or the Inspector. During the course of the drivers' meeting, it shall be the duty of the Inspector to announce how many of the boats in each class shall report for inspection immediately after the running of their event. The Inspector shall also state the location of inspection area.

5. Scales used for weighing boats shall be available 2 hours before any scheduled heats.

BOAT NUMBERS

1. Application for registration of boat numbers shall be made annually to IHRA F1PC on the IHRA annual membership form.

2. Upon receipt of the application for a racing number, properly completed and signed, and accompanied by the correct fees, IHRA F1PC will assign racing numbers

3. The assignment of a racing number in no way guarantees that the boat is qualified for any particular class.

4. All boats entered in a sanctioned race must be registered with IHRA F1PC and display a racing number in conformity with the IHRA F1PC rules for the current membership and racing year. The use of numbers that are unauthorized or not officially assigned for the current year is forbidden and such boats may not be scored or allowed prizes. Numbers not assigned in the following racing year are void.

5. Registrations and assignments of racing numbers become effective January lst and are valid until December 31st unless rescinded or surrendered. Previously registered boat numbers become available after one season of IHRA F1PC membership inactivity.

6. Boat numbers must be block style minimum 12" high vertically with a 2" solid brush stroke. Numbers shall be highly contrasting from the background. Adequate spacing between the digits of a boat number and between the boat number and any advertising or graphics on the boat will be at the discretion of the Race Committee. It will be the responsibility of the boat driver and/or owner to satisfy the requirements of the Race Committee for the placement and clarity of boat numbers in order to allow the boat to be easily scored. Failure of the number to be visible may disqualify the boat.

7. A matching boat number must be placed on top of the engine cowling is contrasting colors to the engine cowlings manufactured base color with a minimum height specified in the class specific rules.

8. A matching boat number must be placed on the bottom of the drivers capsule in black on an orange background with the minimum height specified in the class specific rules.

MEMBERSHIP

1. All persons who wish to be present in the pit/restricted area at any IHRA F1PC sanctioned event are required to become members of IHRA F1PC. This includes but is not limited to all drivers, crew, family members, and officials.

2. All persons who wish to become a member of IHRA F1PC must complete and sign an official membership application.

   A. Both annual and single event memberships are available. SINGLE EVENT membership for the respective event for a maximum of 2 times per racing year. Upon the 3rd time a full membership must be purchased with the single event memberships cost being subtracted from the yearly full membership price.

3. Upon purchase of annual membership, the participant will receive an official IHRA F1PC membership card. This card must be presented to the Scorer at every event.

   A. Memberships shall expire upon resignation of an active member, or upon termination by IHRA F1PC for good cause.

   B. All annual memberships expire on December 31st of each year.

4. Fees

   A. Fees will be charged based on the type of membership required.

   B. No fees or any portion of fees shall be returned to a member because of a member's ceasing to participate in sanctioned competition regardless of the reason for such termination.

5. Qualifications

A. Qualifications for membership shall be specified by IHRA F1PC and may be periodically revised.

6. Physical Condition

A. The IHRA F1PC will require all drivers to complete a DOT or FAA medical examination to determine physical fitness to participate in sanctioned events by May 1, 2026

7. Physical or Mental Disqualification

C. Any driver, mechanic, participant or official who shows visible signs of, or as a result of a medical examination, gives evidence of exhaustion, substance abuse, or other physical or mental abnormality may be barred from competition in a sanctioned event by the Referee.

9. Medical Records

A. Each Participant agrees and consents that in the event of injury or death in the course of or as a result of an event, IHRA may obtain access to and copies of all the Participant's medical records including privileged or protected health information related to such injury or death.

EQUIPMENT

1. IHRA, its officers, directors, officials, employees, contractors, volunteers, promoters, and affiliated entities do not take responsibility for the adequacy of the racing facility, safety personnel or equipment, or conditions at any track hosting a IHRA F1PC event. All Participants are obligated to inspect the racing facilities, safety personnel and equipment, and conditions of the track on a continuing basis before and during each event. Participants are obligated to inspect, observe and promptly report any concerns with the facilities, safety personnel / equipment or conditions of the track to IHRA officials. Participants acknowledge that IHRA does not inspect, certify, or guarantee the safety of any equipment, venue, course condition, or participant conduct.

2. A safety inspection of each entry must be made by the Inspector to determine whether the boat is of safe construction and that all mechanical devices are in good safe working order. All potential back up boats must be inspected and pass inspection prior to the start of the event in order to be used at a later point during that event. An inspection of the driver's helmet and life jacket may also be done before an entry will be allowed to race or test.

3. Any driver or owner shall submit equipment for safety inspection upon request. If the Inspector or Race Committee deems a boat unseaworthy, unsafe, or unmanageable, he/she shall refuse to allow the boat to participate in the race. The Referee, at his/her

discretion, may require any boat involved in an accident to be re-inspected before entering another heat of racing.

4. All boats shall have adequate equipment so that they may be lifted in or out of the water for the purpose of launching or weighing. Single point lifting slings/bridles shall be constructed from minimum 1/4" steel cable or minimum 1" nylon strap. Attachments to the boat and motor will be by clevis pins or snap hooks to permanent attachment points located on the boat/motor and designed for lifting purposes.

5. Competitors may test using any and all equipment deemed safe and mechanically sound at the initial inspection. Once the competitor has qualified and secured their first heat starting order, no changing of boat, power head, or gear case may occur.

A. Changing of the boat, power head, or gear case will result in the competitor moving to the least advantageous starting position for the next start, as well as losing any event points previously accumulated with said equipment.

B. The only instance in which a power head or gear case replacement will be allowed without penalty shall occur if the existing equipment incurs a catastrophic / irreparable failure or is deemed unsafe to compete.

C. If at any point the boat, incurs a catastrophic / irreparable failure, or is deemed unsafe to compete, the competitor will start from the least advantageous position for the next start. The equipment in question shall be subject to inspection to confirm this.

D. Failure to disclose a boat, power head, or gear case replacement to the Inspector at any point in time will result in a disqualification.

GENERAL REGULATIONS

1. All Participants are expected to uphold all rules and regulations outlined during the event sanction period. This includes all subsequent event land and water premises from the time of entry to the time of departure at the end of the sanctioned event.

2. The owner or crew of a competing boat shall not be allowed on the judges' stand unless allowed to do so by the Race Committee. Failure to depart the judges' stand if/when requested may result in penalties and/or disqualification. The Race Committee may designate a drivers' representative to act as agents for all drivers in matters that come before the Race Committee and Referee.

3. No person who has been expelled or suspended from IHRA F1PC shall be permitted to participate, officiate, or allowed to act as a Race Committee member in a IHRA F1PC sanctioned event. At any IHRA F1PC sanctioned event, said persons may be denied access to the race course and/or other premises under the control or supervision of the IHRA F1PC officials.

A. Any Participant who competes in an event for which he/she is not eligible, while under suspension, probation, or for any other reason, shall forfeit all prize money and points won in the event..

4. IHRA F1PC required dress code for drivers is a 1 or 2 piece driving suit which includes long pants must be worn during all on water activities and podium celebrations with no outside coverings. Crew members must all be suited in the same manner as one another throughout the event.

5. No contestant shall participate in a race, nor shall any official serve in an official capacity, after having consumed alcohol or controlled substances or while intoxicated.

A. The phrase "after having consumed or while intoxicated" shall mean from midnight before the day of the race and until all driver have been cleared through inspection.

B. Intoxicated means under the influence of

1) Alcohol,

2) A controlled substance,

3) Any drug, or

4) Any combination of the above, such that there is an impaired condition of thought and/or action.

C. At any IHRA F1PC sanctioned event a breathalyzer test may be required of any participant. A participant will be defined as anyone required to sign the insurance waiver. Breathalyzer may be given under the following guidelines:

1) The Race Committee may, at the time of issuing a sanction, set in place a program to test any or all participants.

2) The Race Committee has the authority to require any or all participants to submit to a breathalyzer test.

3) The Race Committee shall have the authority to require the Referee to submit to a breathalyzer test and/or to ask the Referee to test any participant.

4) Tests may be administered on race day from 7:30 AM until one-half hour after the final heat has concluded.

D. The maximum allowable test limit shall be no greater than .00 BAC. Refusal to take the test will be considered a failed test

6. No contestant shall participate in an IHRA F1PC sanctioned event with any type of splint, cast, or brace without showing written authorization from a medical doctor and obtaining approval by the Referee.

7. All participants must wear closed footwear when driving boats or working as pit crew (working on boats, launching boats, or retrieving boats) in the restricted area.

8. It is not permissible to start or run any outboard motor over land or dock with the propeller, prop nut, washer(s), or thrust washer on the lower unit.

9. Access to the crane area shall be restricted and limited to authorized personnel.

10. If/when overhead aircraft race coverage occurs, it shall be conducted in the following manner:

A. Any and all persons wishing to fly any aircraft over a racecourse during on water activities or competition shall obtain prior approval from the Referee and be briefed as to any rules that may be imposed.

B. Flight permission shall be granted at the discretion of the Referee, giving priority to those crafts whose purpose shall be an official capacity of the event ie: race patrol, safety, media.

C. Drone operator must present a certificate of Insurance prior to the event.

D. Drone pilot must have a valid license.

E. Drone pilot must complete and turn in application form.

F. Drone pilot must have all city permits.

POSTPONEMENT

1. The Race Committee may postpone a regatta, race, or heat as he sees fit.

2. Should it be necessary to postpone a race during a sanctioned event, the black flag will be displayed at the judges' stand.

3. The Race Committee shall have the sole discretion when determining whether racing will continue regarding weather conditions. They may take into account the opinions of participants, the Race Committee, and any race site representatives, but the final decision will lie with the Race Committee.

4. IHRA, event organizers, promoters, and affiliated entities shall not be responsible or liable for any delay, postponement, modification, suspension, or cancellation of any event, activity, race, practice, or portion thereof due to circumstances beyond their reasonable control. Such circumstances include, but are not limited to, acts of God, severe weather, natural disasters, water conditions, fire, flood, lightning, wind, or other environmental hazards; governmental orders, regulations, restrictions, or shutdowns;

public health emergencies; labor disputes; equipment or facility failures; safety concerns; or any other conditions deemed unsafe or impractical by the Race Committee or event officials. Participants acknowledge that no refunds, compensation, or damages are guaranteed as a result of such force majeure events, unless expressly provided by the event organizer in writing.

STARTING

1. Modified LeMans or rolling start may be used at any IHRA F1PC sanctioned event.

2. It shall be at the discretion of the Race Committee as to what method determines starting order for the first heat of racing.

A. When a modified LeMans start is used, starting procedure shall occur as follows:

1) A one minute gun will be fired and a countdown will begin.

2) With 20 seconds remaining, the starting flag will be raised. The starting flag shall be positioned so that it is clearly visible to all drivers. The flag may be dropped at anytime following the 20 second announcement. The flag shall be considered dropped when the downward motion of the flagpole is initiated.

3) The start of the race is considered the moment at which the flag is dropped. At that point, every boat present on the start dock shall be considered a legal starter.

4) Official time will begin at the moment in which the first boat crosses the finish line.

5) Any boat who starts early shall be penalized.

a) If the start is aborted, the penalty shall either be 1 lap dockage enforced at the end of the heat or race or move to the end of the dock, decided at the discretion of the Race Committee.

b) If the start is not aborted, and the flag is dropped, the penalty shall be a 1 lap dockage enforced at the end of the heat or race.

6) Each boat is responsible for the boat on its inside through the exit of the last turn prior to the start/finish line.

B. When a rolling start is used the starting procedure shall occur as follows:

1) Boats will line up 2 by 2 abreast order.

2) All boats not on the 1st row must be within the boats wake directly in front of them.

3) The start of the race is considered the moment in which the flag is dropped.

4) Official time will begin at the moment in which the first boat crosses the finish line.

5) Any boat who starts early shall be penalized.

a) If the start is aborted, the penalty shall either be 1 lap dockage enforced at the end of the heat or race or move to the end of the longest line (last position), decided at the discretion of the Race Committee.

b) If the start is not aborted, and the flag is dropped, the penalty shall be a 1 lap dockage enforced at the end of the heat or race.

6) Any boat exceeding the paced speed at the time the flag is dropped shall be penalized.

7) The lead boat is in the most advantageous position.

3. Race officials may use official videotapes to assist in decision making regarding starts and finishes.

4. The Referee may limit the number of boats starting in any heat or race to ensure safety of all competitors. In such event, the Race Committee must run elimination heats (if conditions allow) for any class in which there are more entries than the permissible number of starters.

5. The final starting order in any event necessitating qualifying heats will be determined in accordance with the IHRA F1PC point system unless otherwise specified by the conducting club. All trophies and cash prizes shall be awarded according to the points earned in the final event.

6. The Race Committee may cancel a heat, if fewer than three (3) boats cross the starting line.

7. An official start is considered when a boat is on the start dock and the start flag is dropped.

8. No boats engine cowling may be lifted or removed without an IHRA Officials approval once the boat has reached the starting dock either prior or during a race.

RESTART

1. In the event a restart is caused by a driver the following conditions apply:

A. If a driver was involved in an accident, he/she may be required to be medically cleared before restarting the race at the discretion of the referee.

B. The driver will line up at the end or the least advantageous starting position.

C. If the race is not restarted, and final results are taken from the last completed lap, the driver will receive a 2 lap penalty.

2. Starting positions for a restart shall be taken from the last completed lap and determined by the order of position, not running order.

3. If a race is stopped, boats may go onto the trailer for inspection or repair without penalty, but will be required to return to the starting area in a timely manner. If they fail to do so, they will be moved to the least advantageous starting position.

4. A rolling restart may be used on all starts after the first start of any heat or final event.

5. Once the final has started no competitor may switch to a back up boat.

FLAGS

Flag signals will be used to convey instructions to all contestants. The flags and their meanings are as follows:

BLACK - course is closed, return to start dock, check with Starter.

RED - competition is stopped, quit racing, stop engine, wait for additional information.

WHITE - signifies the beginning of the last lap.

GREEN - displayed while race is underway and course is clear.

BLUE/WHITE - obstruction on racecourse, continue to race with caution.

CHECKERED - signifies the finish of the heat.

BUOYS

1. A buoy is any object used to indicate the course.

2. Buoys may be used to mark the inside, outside, or specific commitment points on the racecourse.

3. It is mandatory that all racecourses have outside course marker buoys surrounding the racecourse. These outside markers shall be visually different from the inside course markers.

4. The racecourse design and buoy location shall dictate the purpose of the buoy. At the driver's meeting, all buoys shall be identified, located, and their purpose explained. It will be the driver's responsibility to familiarize himself with the racecourse.

5. Penalties will be assessed for missing, damaging, dislodging, or destroying buoys. Penalties may also be assessed if one boat forces another to miss, damage, dislodge or destroy a buoy.

6. Competitors will be charged a monetary fine for damaging a buoy. .

7. Any buoy must be constructed as to inflict no major damage to a race craft if it were to strike said buoy.

8. A man in the water or a man in a stopped boat shall never be allowed to act as a course marker.

9. Buoy penalties will be assessed at the end of the heat or final event.

BUOYS-PENALTIES

1. Contestants who miss a turn buoy may return immediately in a safe an unobstructive manner and circle to the left for a left-turn buoy, or the right for a right-turn buoy, inside the course, and pass the missed buoy on the proper side, keeping clear of the balance of the field in so doing. If a contestant fails to return, he shall be penalized one lap.

2. Any boat which fouls a buoy (except if forced into it because of an overlap violation); forces another boat to foul a buoy or other obstruction; or violates in any other way the rules governing right of way, shall be penalized one (1) lap and a monetary fine. The Referee may, with or without a protest, before the awarding of prizes, penalize any boat which has committed a breach of these rules.

3. Fouled or dislodged buoys should be considered a legal course marker until the leader of the race disregards the fouled or dislodged buoy.

RACE COURSE RIGHT OF WAY

1. Overlap:

    A. Overlap may only be established when two boats are on the same course, or approximately the same course, and the cockpit of the overtaking boat, if overtaking on the inside, is level with the cockpit of the overtaken boat.

    B. When overtaking from the outside, an overlap is established when the overtaking boat has passed the overtaken boat sufficiently to change lanes without contact.

    C. When trying to overtake a boat on the inside the driver must anticipate the possible direction of the boat it is trying to overtake and must take all necessary action to avoid a collision (see drawing)

The following rules shall apply to an overlap:

A. The lead boat has the right of way until an overlap is established.

B. A safe overlap is the responsibility of the overtaking boat.

C. Once an overlap is established, the overtaken boat must give the overtaking boat room to clear any course buoys.

D. The overtaking boat cannot force an overlap after the lead boat has begun to alter course to negotiate a turn.

E. An overlap can occur from port or starboard.

2. Bearing Away:

A. A boat shall not bear out of its course so as to hinder another boat in passing.

B. Bearing away may occur by altering course to either port or starboard to hinder passing by another boat.

3. Blocking: Each boat on the course should hold their lanes when racing so as not to hinder a boat from passing on either the port or starboard. Literally, if a boat is running in lane one and is being overtaken by a boat running in lane two, the lead boat must maintain its lane position if changing said position will cause the trailing boat to alter its course. Conversely if a lead boat is running in lane two and is being overtaken by a boat in lane one, the lead boat may not change lanes if it will cause the trailing boat to alter its course.

4. Lane Change on Start of Heats: Rules controlling lane changing at the start of each racing heat can and will be formulated for specific racecourses. These rules will be announced at the driver's meeting.

5. Lapped Boats

A. Whenever a boat is about to be lapped, all of the overlap and bearing away rules shall be in effect. Neither the overtaking nor the overtaken boat has any specific rights superior to the normal rules.

B. Race officials shall have the authority to order any contestant, who in the opinion of the officials is difficult or dangerous to pass to assume a line around the racecourse that is the least advantageous so that faster boats may pass.

6. After crossing the finish line, a boat shall not interfere with any other boat still in the race.

7. It is the overtaking boats responsibility to pass the lapped boat in a safe manor with legal overlap.

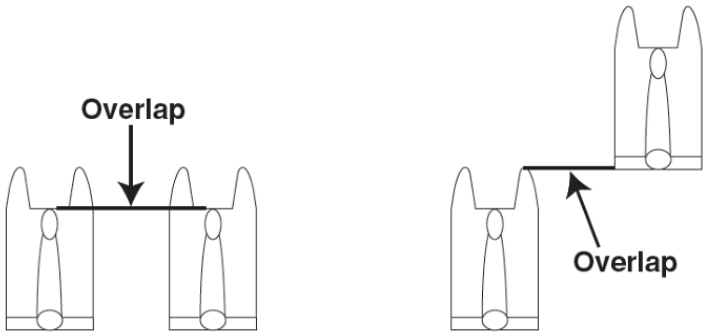

FINISH

1. The checkered flag signals the conclusion of each race.

2. The time of finish of each boat shall be taken when the boat's bow crosses the finish line.

3. The finish of each heat shall be when the last boat in its class has crossed the finish line **after** the leading boat has taken the checkered flag.

4. All boats required for inspection immediately after finishing must report to the inspection area at the place designated by the Inspector.

SCORING POINTS

1. Official IHRA F1PC points system can be found in the table below.

2. In the case that two or more drivers have scored the same number of points, ties shall be broken in the following manner:

   A. Number of laps completed.

   B. Total time elapsed.

   C. Fastest qualifying lap time from the timed qualifying session

3. Points will be awarded for the timed qualifying session positions equal to the heats points system at events with only 2 scheduled heat races.

4. Points will be awarded for the finishing order in heat races and finals based on the points table in all classes. This system will be used in determining qualifying heat racing starting orders after the completion of the first heat. Any boat that lines up for the start under its own power will receive points for that heat. Any boat starting any heat other than the first heat with 0 accumulated points will start in the least advantages starting position. Starting positions for all qualifying heats after the initial qualifying heat and before the final event shall be determined by the reverse order of the sum of the points accumulated

in the qualifying heats. The first heats starting position will be based off qualifying results. The Final starting position is determined in the order of most accumulated points earned for the weekend starting on the most advantageous position and graduating down to the least advantageous position with the least accumulated points.

Note: Events with 3 or more scheduled heat races will use the timed qualifying session for the 1st heat starting position with no points awarded. This point system will determine starting lineup for heats throughout the weekend. This point system will also determine the lineup for the final event. This point system will determine starting lineup for heats throughout the weekend. This point system will also determine the lineup for the final event.

HEAT(S)		FINAL	
POSITION	**POINTS**	**POSITION**	**POINTS**
1	50	1	150
2	46	2	138
3	43	3	129
4	40	4	120
5	37	5	111
6	34	6	102
7	32	7	96
8	30	8	90
9	28	9	84
10	26	10	78
11	24	11	72
12	23	12	69
13	22	13	66
14	21	14	63
15	20	15	60
16	19	16	57
17	18	17	54
18	17	18	51
19	16	19	48
20	15	20	45

RACE FORMAT

***May be modified to accommodate each race site or situation.**

1. TIMING SESSION

The total number of participants will be sub divided into smaller 4-7 boat timing groups. All participants will line up in their respective timing session groups awaiting their timing session. All boats in their respective timing session group when signaled by the referee will enter the course. The timing session will begin by the waving of the green flag. The timing sessions lengths are as follows.

Formula 1:	**4 minutes plus one lap**
Formula Lights:	**3 minutes plus one lap**
Tri Hull:	**draw**
Talent Cup draw	**draw**

The timing session will conclude with a checkered flag, all boats can complete the lap they are on when the session ends by the lead boat crossing the finish line. Immediately following your group's timing session all participants in that group will proceed by following the referees direction. Once all timing groups have completed their timing session all participants of that class will be called to their trailers. Combined timing sessions will determine the first qualifying heats starting order for the class based on the fastest (shortest elapse time) receiving the most advantageous starting position to the slowest (longest elapse time) receiving the least advantageous starting position. At the end of all timing sessions the officiating staff will post the results in the pits.

2. QUALIFYING HEAT RACES

The first qualifying heat race starting lineup will be based on the combined timing session results. Series points system will determine the starting order for any subsequent qualifying heats following the first, see points system section for further details. Qualifying heat race lengths are as follows.

Formula 1:	**8 minutes plus 2 laps**
Formula Light:	**6 minutes plus 2 laps**
Tri Hull:	**7 laps**
Talent Cup	**4 laps Final Races**

3. FINAL RACES

The finals starting lineup will be based on qualifying heat races points totals, see points system section for further details. Final race lengths are as follows.

Formula 1:	**17 minutes plus 2 laps**
Formula Light:	**15 minutes plus 2 laps**
Tri Hull:	**20 laps**
Talent Cup	**4 laps**

PRIZES

1. The amount of cash prizes and the manner in which the purse shall be divided will be at the discretion of the IHRA F1 Powerboat Series for that particular event.

2. The amount of cash prizes to be distributed at each IHRA F1PC event will be posted on the series website and distributed to the drivers in each Event Information.

3. Presentation of awards and cash prizes does not constitute final race results. The awarding of trophies, money or other prizes; submission of press release; or conducting of awards ceremonies may all take place before the race becomes official. All prizes that have been awarded in error prior to the publication of the official race results must be returned by the contestants receiving them before their entries will be accepted for future races. Heats and or races will only become official when all questions of legality or rule compliance have been satisfied. The awards presentation for all participating classes will begin immediately at the conclusion of the Formula 1 final at the designated awards area.

4. All participants must wear their driving suit to the podium celebrations with no outside coverings. See Team Appearance, pg. 8

DISCIPLINARY AUTHORITY

IHRA and its officiating staff are the sole governing body at all times prior, during, and after any of their racing events. This includes all Technical and Racing rules and activities to include but not limited to on course racing, technical inspections, technical rules and their interpretations, points, scoring, appeals and all decisions, code of conduct, professionalism, disciplinary actions, and penalties.

PENALTIES

1. Decisions made by the Race Committee or IHRA F1PC officials may result in penalties.

2. All penalties will be assessed to drivers for their actions or the actions of their owners, crew members, family members, sponsors, or other individuals associated with the team.

3. The Race Committee shall possess the authority to choose a penalty or combination of penalties that, in their opinion, are appropriate for the cited rules violation. Penalties shall be selected from the following list:

A. Lap dockage

B. Monetary fine,

C. Revocation of points,

D. Suspension from participation for a specified time

E. Expulsion from series

DISQUALIFICATIONS

1. The Referee may, with or without a protest, disqualify any boat, should it come to his knowledge before the posting of official race results, that the contestant(s) has committed a breach of the rules.

2. The Referee shall record a disqualification whenever:

A. A driver does not report with his boat to the Inspector after a race for inspection.

B. A driver refuses to dismantle his engine when asked to by the Inspector.

C. A driver forfeits a race rather than submit to inspection.

D. In the opinion of the Inspector, the driver has defied the rule and competed with illegal equipment.

E. In case of infractions of any technical rules during a heat, the driver shall be disqualified from that heat and or heats and final prior to the race inspection revealing the technical infraction.

PROTESTS & APPEALS

1. Protests

A. Contestants shall have the right to protest the application of any of the rules, whether involving themselves or another contestant.

B. Protests must be filed in writing with the Race Director no later than one hour after the close of technical inspection.

C. The protesting party will be required to surrender an appeal fee of $2,500 in cash at the time in which the protest is filed. In cases in which the protest is denied or proven unjust, the fee shall be non-refundable. In cases in which the protest is upheld, the fee shall be refunded less any expense incurred in determining the outcome of said protest.

D. Technical protests will be handled onsite by the lead Inspector, Race Director, and Series Managing Director. If these three are unable to unanimously resolve the protest at hand the parts in questions will be sent at the expense of the protesting team to the head of the IHRA F1 Powerboat Series Technical Committee for a final ruling.

E. Any party with a conflict of interest in the particular protest will be removed from the decision-making role.

2. Appeals

A. Contestants shall have the right to appeal adverse decisions by IHRA F1PC race officials which result in penalties to their teams.

B. Appeals must be filed in writing with the Race Director no later than one hour after the contestant was notified of the adverse action which he/she intends to appeal.

C. The contestant will be required to surrender an appeal fee of $500 at the time in which the appeal is filed. In cases in which the appeal is denied, the fee shall be non-refundable. In cases in which the appeal is upheld, the fee shall be refunded less any expense incurred in determining the outcome of said appeal.

D. The Appeal will be decided onsite by the Race Director and the Series Managing Director.

E. Any party with a conflict of interest in a particular protest will be removed from the decision-making role.

3. Protests and/or appeals will NOT be considered or accepted regarding the following subjects:

A. Fuel testing results

B. Scale accuracy

C. Course driving rules or violations

D. Starting lineup or finish position of any race craft

PROFESSIONAL CODE OF CONDUCT

By participating in an IHRA event all participants acknowledge and agree to abide by the rules and procedures, including those related to release and waiver of liabilities and claims. In addition, the participants are responsible for the actions of their families, crew members, sponsors, and anyone deemed associated with their team. All parties involved in an IHRA event are expected to conduct themselves in a responsible manner, always respecting the rights of others, both on and off the water. All participants understand that violation of the rules and procedures can lead to forfeiture of their competition privileges. Anyone whose appearance, conduct, actions, associations or affiliations, at or away from an IHRA event, which is deemed not conducive to the best interest of the organization or who exhibits conduct which is inappropriate, offensive, abrasive or in bad taste may be penalized monetarily, points, combination of the two, and or suspended from competition. The Professional Code of Conduct does include social media in all forms. A zero-tolerance policy means that no previous warning is necessary for a penalty to be incurred. The above list is provided as guidance to competitors but does not restrict the series from invoking penalties for other actions detrimental to the sport, series, or its sponsors that are not specifically contained herein.

DISCIPLINARY CODE

1. YELLOW / RED CARDS

Series management and/or race officials may issue yellow or red cards for violation of any rules or directives from officials or series management. Yellow/red cards may also be issued for un-sportsmanship like conduct, rough or dangerous driving, and/or any activities deemed unsafe to

participants, officials, or spectators. All team members including owners, drivers, and crew (family) are subject to these rules governing the issuance of yellow/red cards.

2. **YELLOW CARD** will be issued for less severe violation of the above and are at the discretion of the series management and/or race officials. Protests and appeals are not allowed for the issuance of yellow cards unless suspension is involved. Yellow cards will remain viable for a period of six months after the card is issued. Yellow cards will be withdrawn after the expiration of the period stated above. Anytime a second yellow card is issued to a particular person within a six-month period, a red card shall be issued and the mandatory suspension period of twelve months shall begin at that time.

3. **RED CARD** will be issued for severe violations of the above and are at the discretion of the series management and/or race officials. Red cards shall result in a mandatory suspension of twelve months. Written appeals for the issuance of red cards may be directed to the series management within twenty-four hours of the person's notification of issuance of a red card. When a red card is issued, the mandatory suspension period shall begin immediately and can at series management's discretion include the owner, driver, and all participating crew members, and family of the team.

2026 IHRA F1PC EVENT MANAGEMENT

SANCTIONS

1. Definition: An IHRA F1PC sanctioned event is any event that IHRA F1PC has agreed in writing to sanction. A sanction for a specific event does not obligate IHRA F1PC to enter into a sanction agreement, or to issue a sanction, for any future event.

2. Running of Race: A race must be run in accordance with all provisions of IHRA F1PC rules and under the direction of the Referee.

3. Race Reports and Summary Sheets: All race reports, summary sheets, and any other required documentation, must be completed in full and signed by the appropriate officials. The Scorer shall immediately file a full report of race results and send to IHRA F1PC Headquarters within ten days following the last day of the sanctioned event.

4. Sanction Fees: Each conducting club shall remit a sanction fee to IHRA F1PC Headquarters at the time in which the sanction is requested. Sanction applications that are not received by IHRA F1PC Headquarters more than two weeks prior to the event date are subject to nonacceptance.acceptance.

MANAGEMENT

1. All IHRA F1PC sanctioned events and all boats taking part in said event shall be under the control and direction of the Race Committee. The Race Committee shall consist of a Series Managing Director, Race Director, Risk Manager, Scorer, Starter, and Inspector. All questions, disputes, and other matters that arise at said event will be decided and course of action determined by the Race Committee. Any person who does not agree with the decision of the Race Committee may appeal his/her ruling as it applies to them.

2. The decision of the Race Committee shall be based upon these rules, but no rules can be devised capable of meeting every incident and accident of racing. The Race Committee should govern with rational and consistent ruling and discourage all attempts to win a race by other means than fair racing, superior skill and speed.

3. No member of any Race Committee or the Referee shall take part in the decision in which he is directly interested.

RACE DIRECTOR & DUTIES

1. The Race Director shall function as head of the event Race Committee and shall be the primary representative of IHRA F1PC at any IHRA F1PC sanctioned event. It shall be the responsibility of the Race Director to effectively organize the racing event, to implement appropriate safety measures and to provide the necessary personnel and adequate facilities as required by IHRA F1PC for officials, competitors and other participants.

2. The Race Director shall assist IHRA F1PC in the securing of entries.

REFEREE & RACE COMMITTEE DUTIES

1. The Referee must be at least 18 years old and a current member in good standing with IHRA F1PC.

2. A IHRA F1PC approved Referee shall be present at any IHRA F1PC sanctioned event

3. All referees must have completed and passed a yearly referee test before being approved to work at an event.

4. All personnel connected with the event, officials, drivers, mechanics, and owners will be under the jurisdiction of the Referee and Race Committee during the entire event.

5. The Referee is to have in his/her possession a copy of the insurance certificate before any boats are allowed on the racecourse.

6. The Referee of a sanctioned regatta must require that:

   A. All proper officials are present and functioning during the event and that said officials obey and enforce all rules fairly. He/she must make sure the timing, scoring, and all other details of procedure are properly handled. The Race Committee shall have the right to remove any official or assistant at any time who fails to perform satisfactorily.

   B. Adequate facilities are available for the efficient conduct of the race before the sanctioned testing or racing activity begins. The Referee and/or Race Director shall visually verify that the racecourse setup adheres to plans on the approved insurance application and to all IHRA F1PC rules prior to beginning racing activities.

C. Adequate pit facilities, pit security, and course patrols are provided and promises as to prizes or other inducements of the race circular are fulfilled.

D. A properly equipped ambulance will be used and either a doctor, registered nurse, paramedic, or an EMT will be in attendance.

E. Two patrol boats as an absolute minimum are present on the course at all times during racing activities and that only authorized personnel are present on the safety and/or patrol boats.

7. The Race Committee shall have the authority to modify the racecourse as he/she deems necessary to ensure the safety of all participants and spectators.

8. The Race Committee shall have the sole discretion when determining whether or not racing will continue regarding weather conditions. He/she may consider the opinions of participants, the Race Committee, and any race site representatives, but the final decision will lie with the Referee.

9. It is the duty of the Race Committee to see that the insurance waiver /release forms are being signed by all PARTICIPANTS and that everyone who signs a waiver wears a nontransferable wrist band. Other forms of verification are not acceptable.

10. It shall be the Referee's responsibility to attend all drivers' meetings, protest hearings, and any meeting of the Race Committee, and while he/she may advise, he/she does not vote. Referee is required to see that all questions regarding rules, racing conduct, and awards/prizes are thoroughly explained to all contestants.

11. A Referee shall be present on the judges' stand at all times when heat racing takes place. If the Referee is unable to be present at the judges' stand, the Assistant Referee shall take his/her place and have full authority until the Referee returns.

12. The Referee shall prohibit use of any equipment he/she deems unfit for service.

13. The Referee shall notify the owner and/or driver of any disqualifications as soon as possible.

14. Following the finish of any race, the Referee may require any winning boat to be torn down, inspected, measured and weighed, when weight is a requirement. The Referee may waive inspection.

15. The Race Committee shall forward to IHRA F1PC Headquarters, as soon as possible after an event, a report which shall include at least the following information:

A. Details of any accidents,

B. Details of protest or appeals,

C. Any action taken or penalties imposed,

D. General observations and recommendations pertaining to the event,

E. Any problems that he/she may have had enforcing any rules

F. Any other material that the Referee may deem appropriate or as IHRA F1PC may request.

16. The Referee shall immediately submit incident reports to IHRA F1PC Headquarters following the event. This does not preempt local authorities from reporting those accidents required by state and federal law. Race officials will assist local authorities in completing reports if necessary.

RISK MANAGER & DUTIES

1. The Risk Manager must be a current member in good standing with IHRA F1PC.

2. The Risk Manager must work with the Referee to make sure that the event is in full compliance with all IHRA F1PC rules and requirements.

3. The Risk Manager will report any and all violations immediately to the Referee and have the authority to correct any violation.

SCORER & DUTIES

1. The Scorer must be a current member in good standing with IHRA F1PC.

2. A IHRA F1PC approved Scorer shall be present at any IHRA F1PC sanctioned event

3. The Scorer must take and pass the scoring test annually with the minimum required passing grade prior to being named Scorer.

4. The Scorer shall be in charge of registration and scoring.

5. The Scorer shall obtain, compile, and record all necessary timing and scoring information for each event. The Scorer shall inform the Referee and the Starter of the standings during the course of all races. The Scorer shall provide results of the competition and other material as may be directed by the Referee as soon as possible.

6. The Scorer is responsible for reviewing and submitting all summary sheets, data sheets, entry blanks, liability release waivers, minor releases, money and any other registration forms used to IHRA F1PC Headquarters within ten days following the sanctioned event.

7. The Scorer shall assist the Referee in completing accident/incident reports.

INSPECTOR & DUTIES

1. A IHRA F1PC approved inspector shall be present at any IHRA F1PC sanctioned event.

2. The Inspector must be a current member in good standing with IHRA F1PC.

3. The inspector shall be required to attend the drivers' meeting and any meeting of the Race Committee. The Inspector will inform the drivers of the number of finishers required in inspection after any heat or final race.

4. It shall be the duty of the Inspector to see that all provisions of the technical rules are complied with by contestants.

5. Technical questions regarding the legality of a boat or motor should be referred to the Inspector at each respective event.

6. Immediately after the finish of a race, contestants shall report with their boats and motors to the Inspector at such place as designated by the Inspector. The boat and motor shall remain in the custody of the Inspector until dismissed. For the purpose of the enforcement of technical rules, the engine and boat shall be assumed to have been raced in the same condition in which it appears during post-race inspection. Any violation of the rules shall be submitted as soon as possible to the Referee for appropriate action.

7. Following the finish of any race, the Inspector shall require any contestant to dismantle his/her motor for inspection and/or measurement and require that the race craft be weighed as is, in the condition the boat finished the race. A boat which flips, or sustains substantial damage in a heat, does not have to meet minimum weight requirements for the heat in which the damage was sustained (at the inspectors' discretion). Any contestant refusing to comply with the orders of the Inspector may be disqualified by the Referee.

8. The driver shall be responsible for the condition of the motor and hull as raced. Errors on the part of the manufacturer, boat builder, mechanic, or previous owner shall not excuse noncompliance with the rules.

9. Whenever the Inspector has a technical disqualification, he must immediately complete an official IHRA F1PC Disqualification Form and have the Referee sign it. The Referee is to see that this completed form is given to the driver or owner as soon as possible.

DUTIES OF SAFETY & RESCUE TEAMS

1. Safety & Rescue Teams can be defined as the teams designated to provide medical care and rescue services to IHRA F1PC boat racers.

   A. The Safety & Rescue Team must consist of current members in good standing with IHRA F1PC

   B. If, during competition or testing, a driver appears to need medical assistance or rescue services, the Safety & Rescue Team must signal the Referee to stop the race.

2. Rescue Boats:

   A. All rescue boats shall have radio communications with the Referee, or his designee.

B. No fewer than two rescue boats shall be present on or around the race course during testing and heat racing.

C. The rescue craft crew shall lift all accident victims from the water in as nearly a horizontal position as possible on a backboard, if/when necessary.

D. The rescue boat staff shall consist of a minimum of two persons. All personnel on the rescue boat must be a minimum of 18 years of age.

E. It is required that one person in the rescue boat shall be capable of providing basic life-support administration.

F. It is required that one person in the rescue boat be a qualified diver capable of administering SCUBA air underwater.

2026 IHRA F1PC SAFETY REGULATIONS

CAPSULE CERTIFICATION

1. All beginner drivers must complete the IHRA F1PC capsule training certification prior to competing in any IHRA F1PC event. All drivers will be required to recertify a minimum of every two years from the date of their last certification. The IHRA will accept valid capsule training certifications from the UIM and APBA for the 2026 season.

IHRA F1PC Capsule Training for drivers shall be performed under the following conditions:

A. Capsule training shall occur in a completely controlled environment.

B. A minimum of one certified diver shall be in the water while training is conducted.

C. It is recommended that IHRA F1PC Capsule Training shall take place in a swimming pool but not mandatory.

D. In order to complete the IHRA F1PC Capsule Training, drivers must be able to demonstrate the following:

1) Driver must demonstrate how to properly clear the SCUBA regulator.

2) Driver must demonstrate how to properly use the SCUBA regulator underwater.

3) Driver must demonstrate how to properly extricate himself/herself from the training capsule.

a) Driver must be able to properly (1) open capsule, (2) remove steering wheel, (3) remove safety belts/harness, and (4) exit capsule unassisted.

4) Driver will be required to (1) remain secured in capsule after being flipped and use SCUBA air underwater, and (2) extricate himself from capsule after being flipped once more.

E. Driver will be required to wear all required safety equipment including life jacket and helmet.

F. Capsule training will be performed with no supplied air mask.

BEGINNER DRIVERS

1. A Beginner driver is defined as new driver to the sport that has competed in less than 4 qty. IHRA or equivalent Nationally recognized events. A Rookie driver is defined as an experienced driver competing in a class for the first year.

2. A beginner driver must for their first racing year, tape an orange "R" on the rear of their motor. The "R" must extend from the top of the cowling to the bottom and must be visible to all other drivers.

3. The beginner driver shall start at the least advantageous starting position regardless of any prior qualifying until deemed capable by the Race Committee. The beginner can be delayed in a manner at the start so as not to approach the first turn with the "pack." During the course of the race the beginner driver must always pass all boats on the outside and give adequate room to be overtaken on the inside by all faster boats.

4. This rule is not to restrict or disqualify any UlM, CBF, ACHA, or APBA members or any other duly qualified and/or licensed driver.

ROOKIE DRIVERS

1. A Rookie driver is defined as an experienced driver competing in a class for the first year.

2. A Rookie driver must for their first racing year, tape an orange "R" on the rear of their motor. The "R" must extend from the top of the cowling to the bottom and must be visible to all other drivers.

3. The Rookie driver shall start at the least advantageous starting position regardless of any prior qualifying until deemed capable by the Race Committee. The Rookie driver can be delayed in a manner at the start so as not to approach the first turn with the "pack." During the course of the race the Rookie driver may be mandated to pass all boats on the outside and give adequate room to be overtaken on the inside by all faster boats.

PRE RACE SAFETY INSPECTION

1. The Inspector will inspect all boats prior to the start of any on-the-water activity to confirm that all rules and conditions have been complied with. An inspection of each entry will be made by the Inspector to determine whether the boat is seaworthy, of safe construction and that all mechanical devices for steering, throttle, lifting bridle, etc. are in good and safe working order.

Items to be checked each time should include the following but are not limited to: See pg.13, 2026 Pre Race Equipment Checklist.

HELMETS & LIFE JACKETS

1. When strapped in to or operating a race craft at any time during a sanctioned event, a driver must wear a helmet, life jacket and some form of driving suit which includes long pants and long sleeves. Exceptions to this rule include: removal of helmets only when the boat is stopped or operated off-plane at idle speed, and when there are no other race boats operating on plane on the racecourse or in the vicinity so as to create a danger, or when the driver's boat is tethered to a tow boat.

2. Participants are solely and ultimately responsible for selecting a suitable helmet and life jacket. Any helmet or life jacket deemed unsafe due to age or condition may be deemed unfit for service at the Race Committees discretion, but all must meet the following requirements:

A. The legal helmet for the 2026 season must have the 2015 SNELL, SFI, FIA certification sticker, or newer, attached to the inner shell of the helmet. If your helmet has an older SNELL certification (Snell 2010 or older), or no sticker, you will not be allowed to participate until it's replaced. The helmet rating must be 12 years or less from the rating date code. When purchasing a new helmet look for the latest certification (2015 or newer).

1) Helmets must be highly visible in color. Solid black or dark colored helmets are not permitted. See Referee for approval.

2) Half-shell type helmets are not allowed.

3. When driving any racing craft, eye protection in the form of a helmet face shield, goggles or ANSI/OSHA approved safety glasses shall be mandatory.

A. A full canopy is described as "a cover for the top of the reinforced cockpit which completely encloses the driving compartment and is securely fastened". Canopies meeting this criterion shall be considered sufficient eye protection

4. IHRA F1PC requires the use of a helmet restraint system, in classes that require a driver restraint system, a donut-style neck brace is not sufficient.

5. It is recommended that all life jackets be designed with a ballistic covering and have a minimum of 10 pounds positive flotation.

6. All racing life jackets must be of the following type category:
A) A, B or C

1) "A" For use in an open cockpit and by an unrestrained occupant. Maximum boat speed is less than 100 mph. a) Type A shall have at least 70% of upper surfaces above the waist both front and back international orange or yellow in color.

2) "B" For use by a restrained occupant of a cockpit, not necessarily employing supplemental life support equipment needing life jacket accommodations. Color is exempt.

3) "C" For use by a restrained occupant of a cockpit, that employs supplemental life support equipment. Color Exempt.

7. All life jackets must be equipped with epaulet-type extraction loops on the shoulders.

8. Buckle type straps across closures and skid collars are not permitted on any restrained driver's life jacket.

TEAM APPEARANCE ALL TEAMS IN ALL CLASSES

1. All podium finishers must wear their driving suit with no other garments over the top of the driving suit on the podium.

A. Drivers must wear a 1 pc. Driving Suit displaying the IHRA logo patch on the right-hand chest.

B. Drivers Lifevest must display the IHRA logo patch on the right-hand chest.

C. Crew members must wear matching shirts on all official event days with the IHRA Logo displayed on the front.

D. All boats must have all parts painted to a scheme, no bare repairs.

E. All boats must display the IHRA logo decal, all required series and local sponsor decals per the Sponsor Logo Sticker and Patch Placement diagram on pg. 13. This can change from race to race to satisfy event sponsor obligations.

F. No Competing Series or sanctioning body logos can be displayed on the boat, driving suit, lifevest, or crew uniforms during an IHRA F1 Powerboat Series sanctioned event.

Sponsor Logo Sticker and Patch Placement

No Competing Series or sanctioning body logos can be displayed on the boat, driving suit, lifevest, or crew uniforms during an IHRA F1 Powerboat Series sanctioned event.



Driver's Suit
Crew Uniforms
Life Jacket

No Series Sponsor Decals on the flat decks. Additional sponsor decals may be added at any time.

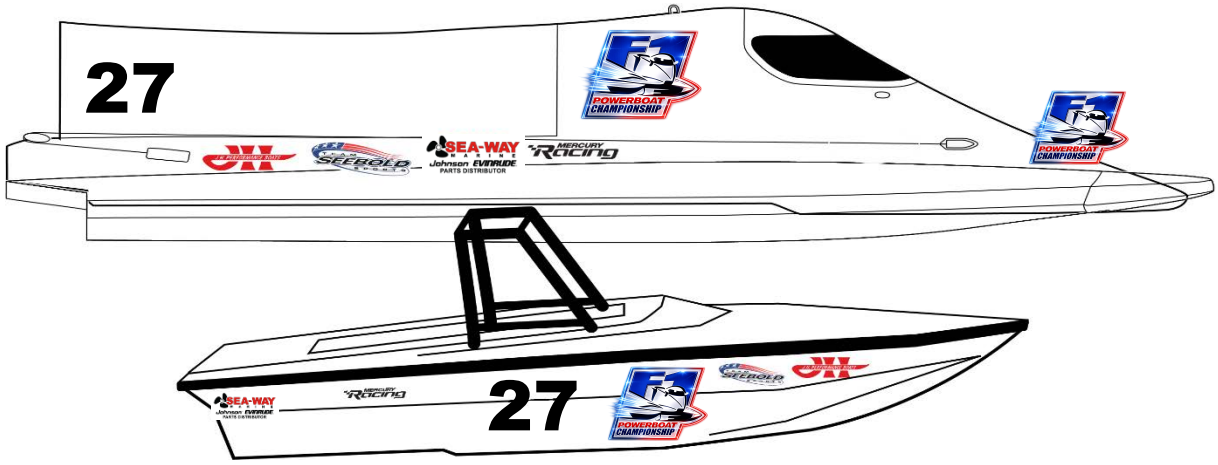

2027 Pre Race Equipment Checklist

Driver: _____ Boat #: _____

Class: _____ Date: _____ Location: _____

[ ] Cockpit Training renewal date imprinted on membership card. If there is no date on card, then must show receipt of Capsule Training completion (within acceptable dates).
[ ] Helmet: Must have Snell 2015 or newer. The helmet rating must be 12 years or less from the rating date code.
Make: Model:
[ ] Head Clearance between Helmet and Reinforced Cockpit must be a minimum of 2”(4” Recommended)
[ ] 50% must be yellow, orange, red or lime green, Helmets must be highly visible in color.
[ ] Check Condition [ ] Straps
[ ] Drivers Suit [ ] IHRA Patch
[ ] Driver Helmet Restraint System
Make: Model: [ ] Type
[ ] Form fitting seat with Lumbar support Type:
[ ] Driver Restraint Harness [ ] SFI 16.1/16.5 [ ] FIA 8853/2016
[ ] 5 Point [ ] 6 Point Make: Year: [ ] Cockpit Padding
[ ] Head Area Padding [ ] Side Padding
[ ] Lifevest
Make: Model:
[ ] Label that indicates type of category, B or C. [ ] IHRA Patch
[ ] Check Condition
[ ] Lifting Sling: Minimum 1/4” steel cable or 1” nylon strap, closed snap hooks or clevis pin. [ ] Check Condition _____ Year Mfg:
[ ] Lifting Eyes [ ] Bow Eye
[ ] Boats Capsule Bottom Numbers (12” block contrasting) [ ] Boats Engine Cowling Top Numbers (block contrasting)
[ ] Boat Numbers Side (12” block contrasting)
[ ] Sponson Tips Formula Light minimum tip radius is 2.5”, Formula 1 minimum tip radius is 4.0”. Telescopic extensions shall have minimum tip radius of 1.0” and no more than 3” X 3” of floatation foam.
[ ] TSCM (Timing/Scoring/Course Management System
[ ] Operation [ ] FR Antenna [ ] GPS Antenna, 40" from front pickle tips
[ ] Engine Stop; Inside Cockpit
[ ] Roll Over Switch, Make sure weight is free to move for switch activation
[ ] Capsule Outside Engine/Fuel Pump Shut Off Switch
[ ] Main Battery Switch [ ] Battery(s) mounting [ ] Wiring Inspected
[ ] Fuel System [ ] Tank Mounting [ ] Tank Ground [ ] Check for leaks
[ ] All accessories securely fastened [ ] Engine properly bolted
[ ] Power Trim [ ] Check trim In & out operation [ ] Check power trim up & down operation
[ ] Check swivel pin and trim ram for free play and trail out. [ ] Mounting of the in & out pump
[ ] Mounting of the up & down pump
[ ] Driver’s Air System [ ] Yes [ ] No Make: Model:
[ ] Radios check operation between driver and crew
[ ] Steering Operation [ ] Electric System [ ] Inspect cable & mounting fasteners
[ ] Foot Throttle Operation [ ] Return at Engine to close
[ ] Canopy [ ] Hinge pin removal at closed [ ] Latches [ ] Windshield [ ] Mirrors

Drivers Signature: _____ Date: _____

FLOTATION REQUIREMENTS

All boats must contain the volume of permanently attached flotation foam as listed below:

Class	Total Cu. Ft. of Foam in Boat (incl. cockpit)	Total cu. ft. of foam in reinforced cockpit
TriHull	6.0 ft^3	
Formula Lights	4.0 ft^3	2.0 ft^3
SPORT F1	6.0 ft^3	3.5 ft^3
Formula One	6.0 ft^3	3.5 ft^3

REINFORCED COCKPITS

1. The following classes are required to have a driver restraint/reinforced cockpit: Formula One, and Formula Lights

2. All reinforced cockpit boats (Formula 1, and Formula Lights) must:

   A. Have switches for ignition, starter, and electrical fuel pump if so equipped, mounted inside the cockpit where they are easily actuated by the driver when he is strapped in.

   B. Have a positive on, positive off ignition switch for the engine as well as a similar switch for the electrical fuel pump if so equipped, mounted on the left (port) outside of the cockpit. No momentary switches are allowed for these requirements. All switches must be clearly labeled on the outside of the cockpit as Engine Shut Off and/or Fuel Shut Off. Both functions may be combined in a single switch and labeled accordingly. Looped tethers activating inboard mounted switches are allowed and such switches may be the same ones as required as above. It is recommended these switches be mounted at the left upper rear of the capsule behind the driver's head.

   C. Have a centrifugal force actuated or inversion actuated shutdown switch. This switch must be mounted in the main cockpit area of the hull and be capable of disabling the engine ignition system and shutting down the electric fuel pump, if the boat is so equipped, when the boat is upside-down. It may be placed inside the driver compartment so that it may be easily reset in case of a complete roll; and it may satisfy the requirements of as above. This switch assembly must be easily removable for safety inspection purposes.

3. All reinforced cockpits intended for use in IHRA F1PC sanctioned events shall meet the following criteria:

A. Cockpits constructed as of January 1, 2005 for Formula One and Formula Two classes shall meet the 3000 Newton test.

B. Cockpits constructed as of January 1, 2005 thru December 31, 2015 for Formula Light classes shall meet the 2000 Newton test or better.

C. Cockpits constructed as of January 1, 2026 for the Formula Light classes shall meet the 3000 Newton test.

4. All drivers racing an approved reinforced cockpit boat, shall be required to utilize a restraint system, consisting of a minimum 5-point mounting design. The restraint system shall consist of not less than two lap, two shoulder, and one or two crotch straps, hooked together in a central release system. This release mechanism must remain released/open once it is activated and until it is reset. All belts shall be at least 2" wide, entirely constructed of polyester material, SFI 16.1 or FIA 8853/2016 certified; and either replaced or recertified within two years after the date of manufacture indicated on the SFI and FIA patch. The easily identified patch must have the manufacturer's expiration date with one patch sewn onto the left strap of the lap belt assembly, one onto the left strap of the shoulder harness assembly and one onto the anti-submarine strap. Belt systems must be mounted following manufacturer's recommendations (see Figure A). It is mandatory for boats that the shoulder harness straps should be mounted to a metal channel spanning the backboard securely fastened to the sides of the center section of the boat as shown in Figure B.

5. For all reinforced cockpits using a full coverage canopy, the following shall apply:

A. Must provide airflow ventilation. It is recommended that the openings used in the ventilation system cut as little of the laminate around the driver area as possible. The driver area is defined as within 4' in all directions of the head and torso of the restrained occupant.

B. The canopy is to have both internal and external release capability. It is highly recommended that the release system be constructed of materials that will resist corrosion from exposure to water and UV radiation.

C. The laminate portion of the canopy must be constructed from the same lay-up schedule as the reinforced cockpit submitted for approval. It is recommended that the windscreen shall be constructed using a minimum wall thickness of 3/16" (0.187), of a shatterproof material. The use of polycarbonate material "Lexan" or equivalent is recommended.

6. All attached hinges must have an easily removable stainless steel hinge pin utilizing a pull ring a minimum of 3/4" in diameter and accessible from outside the cockpit.

7. A removable "spring loaded" steering wheel is required in all reinforced cockpit vessels.

8. Left and right rear view mirrors are required for all approved reinforced cockpit boats. It is recommended the mirrors be mounted to the capsule.

9. The top of the front of the capsule should be a minimum of 4" below eye level. For forward visibility a windscreen may be incorporated in the opening of the reinforced structure such that the lowest edge of the opening is not more than 7" below eye level and must provide a minimum of 2" below eye level.

10. All cockpits without structural halo must include coverage of over 50% of the driver's helmet (with the head in the furthest aft position, against the bulkhead) both above and on the sides.

11. All boats are required to have a backboard (bulkhead behind seat) of reinforced material equaling the side in height. The reinforcement extends past the driver's compartment area and conforms to the normal sides of the boat.

12. All classes with reinforced capsules/cockpits utilizing a restraint system must have a seat with lumbar support.

13. Driver Cockpit Padding a minimum 1/2" (9 lb.) Ethofoam support behind driver's helmet. It is recommended that head surround padding shall comply with SFI 45.1. Energy absorbing foam padding to be strategically placed inside capsule (in areas where knees, hands, etc. might impact).

14. Audio communication (radio, etc.) from shore to driver is mandatory for all boats with a reinforced cockpit.

A. A spotter or spotters in audio contact with the driver(s) shall be stationed in immediate proximity to the referee or his/her designee to facilitate direct communication with thedriver(s) as directed by the referee or his/her designee.

15. AIR SYSTEMS: Onboard air system usage is required for all drivers in reinforced cockpits/ capsule boats. A 30 cu. ft. air tank capacity is recommended. The driver's mask must cover the driver's nose and mouth and be designed to be watertight. The mask must be attached in such a way as to prevent its being dislodged or removed inadvertently. An ambient air valve is allowed; an ambient air valve is required when air tank capacity is less than 30 cu. ft. The mask shall be worn by the driver anytime the boat is under racing or testing conditions. All tanks regardless of size should be designed for the delivery of breathing air. The tank must be stamped to verify inspection and certification of the tank to meet D.O.T. (US Department of Transportation) or T.C. (Transportation Canada) standards. The air tank shall be securely mounted to the boat; a commercially made driver worn holster is acceptable only for appropriately sized tanks. All components of the air system shall be rated for use with compressed air and with the pressures utilized. All connections in the

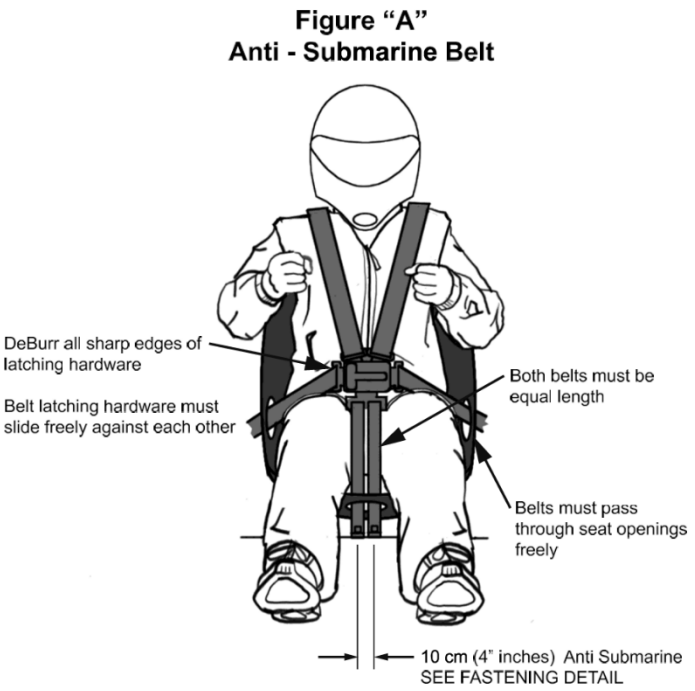

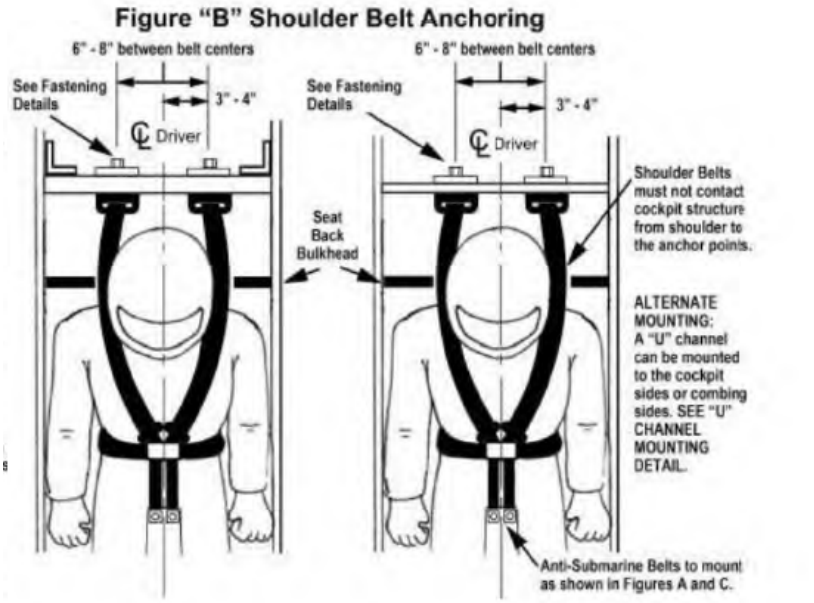

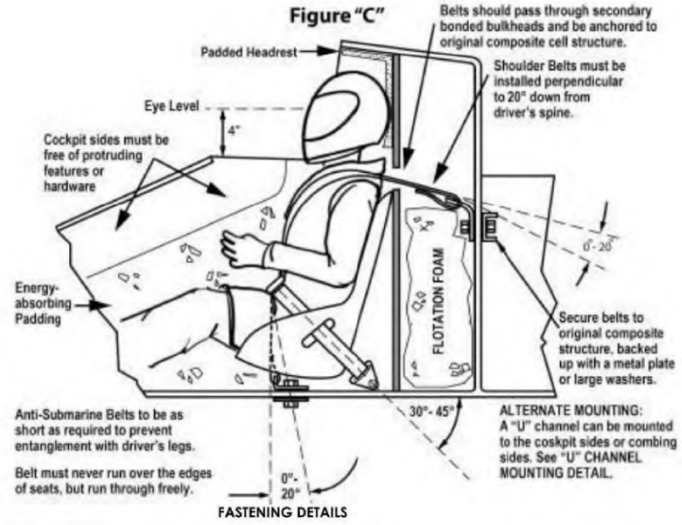

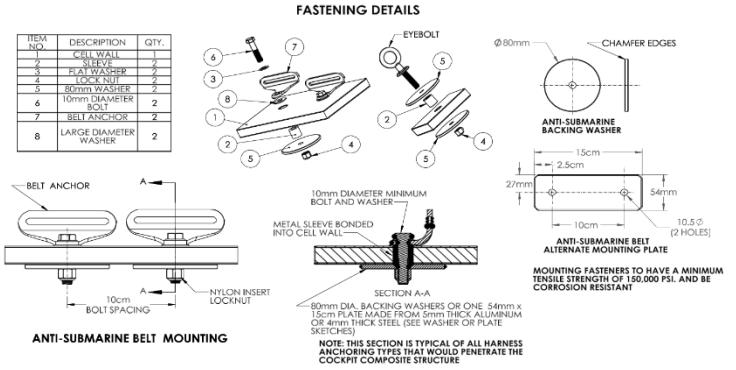

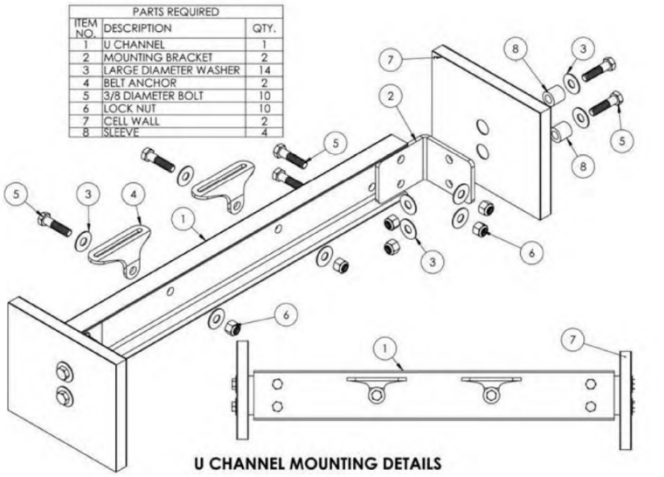

PICKLEFORKS

1 All race boats of the catamaran type that are designed to have, or that have been modified to include, a spherical bulkhead at the termination of the bow end of the sponson, do not require deformable picklefork tips. Boats designed and constructed to include optional picklefork tips must conform to the following:

A. The termination of the main body of the forward end of the sponson must end in a minimum of 100cm^2 (16in^2). The forward bulkhead shall be com-posed of a minimum of 3/4" thick plywood or equivalent material. This bulkhead must be an integral part of the main structure of the sponson. (Note: the purpose of the bulkhead is to cap the ends of the stringers; see Figure F.) The bulkhead must also have an additional rounded area or cap (spherical radius of at least 2.5" for Formula Lights. All Formula 1 and SPORT F1 require a spherical radius of 4"). See Figure F.
B. Optional picklefork tip may slide over the sponson as shown in Figure F.
C. Picklefork tip shall have a front-end minimum horizontal radius of 1 3/8".
D. Picklefork tip shall have a front-end minimum spherical radius of 1" (see Figure F).

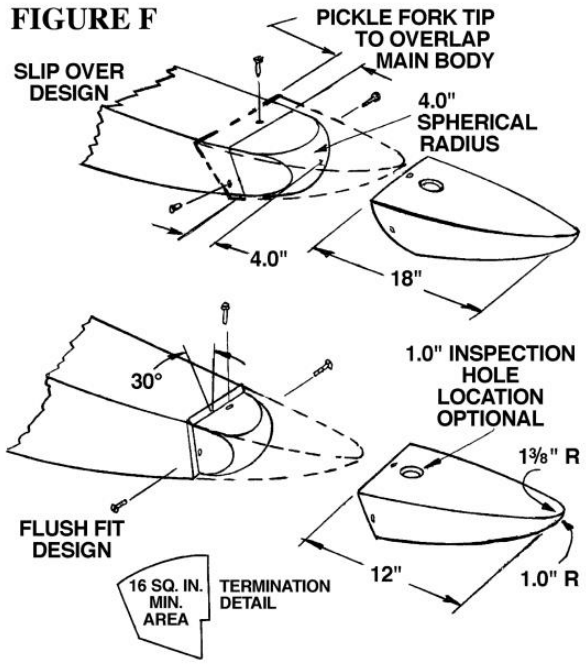

CAPSULE NOSE

All capsules manufactured after March 1, 1997 must stop the composite lay-up and install a composite lay-up load deflecting bulkhead at a point not to extend past the sponsons with the fiberglass tips off. The radius of the collapsible cell nose must be equal to or greater than the pickle tips. Figure G

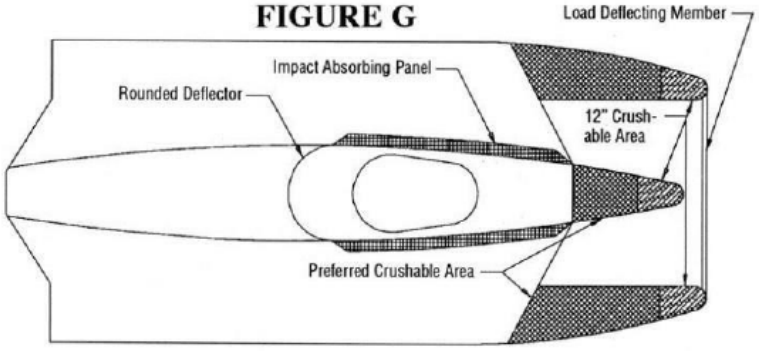

POST RACE INSPECTION AREA

An individual tented post-race inspection area will be designated for each boat and team summoned to inspection after the completion of the events final. A maximum of two team members and no one else will be allowed into their respected areas. At no time will another team member or driver be allowed into an opposing teams area. Violation of this proceeding will result in disqualification from the weekend's events including but not limited to all points and prize money earned.

2026 IHRA F1PC TECHNICAL SPECIFICATIONS AND CLASSES
TRI HULL CLASS TECHNICAL SPECIFICATIONS

BOAT STANDARDS

1. DRIVER RESTRAINT SYSTEM

   A. All Trihull boats must be equipped with a driver restraint system consisting of a minimum 5-point mounting design. The restraint system shall consist of not less than two lap, two shoulder, and one or two crotch straps, hooked together in a central release system. This release mechanism must remain released/open once it is activated and until it is reset.

   B. All belts shall be at least 2" wide, entirely constructed of polyester material, SFI 16.1 certified; and either replaced or recertified within two years after the date of manufacture indicated on the SFI and FIA tag. The conformance label is a "punch out" patch. One patch shall be sewn onto the left strap of the lap belt assembly, one onto the left strap of the shoulder harness assembly and one onto the anti-submarine strap. The patch shall have the month and year of manufacture punched out and easily identified. Belt systems must be mounted following manufacturer's recommendations.

2. ROLL CAGE

   A. All Tri hull boats must have reinforced roll cage The roll cage must be constructed so as to protect the driver from frontal, side, rear, and top impact.

B. The entire roll cage is required to be constructed of either mild steel 1 5/8" round tubing with minimum 0.118 wall thickness or 4130 chromoly 1 5/8" round tubing with minimum 0.083 wall thickness. The only exception to this will be the bottom seat mounting brackets, which are 2" x 2" angle iron.

C. All joints must be welded.

D. Roll cage must be welded by a certified welder.

E. The roll cage must be mounted to the floor or bottom of the boat and attached in such a manner to prevent it from being dislodged in case of an impact.

F. All roll cages must be "U" bolted to a structural brace. The structural brace will be required from one side to the other behind the driver's seat inside the boat. Its purpose is to provide support for the gunnels and the driver's cockpit in the event of a side collision.

G. Roll cage must have no evidence of rust, corrosion, or damage of any kind. Tubing ends must be capped and there shall be no holes of any kind so as to prevent water from becoming trapped in the roll cage. Referee may deem any roll cage unfit for use at his/her discretion.

H. See following page for acceptable roll cage dimensions.

I. A form fitted seat with lumbar support is required.

3. STEERING

A. Steering will be either rack and pinion, rotary cable, hydraulic, no electric assist will be permitted. The steering must be in the original dash location front to rear.

4. HULLS

A. The only legal hulls allowed are those manufactured from molds owned by Richmond Boat Works Inc.

B. Boats must remain intact. Any material on the inside of the gunnels may be removed, with the exception of dash and splash well. The bottom of the boat may be reworked.

5. WEIGHT

A Combined boat, driver, and equipment weight, along with series provided sling, must be a minimum of 1675 lbs following heats.

6. MOTOR STANDARDS

A. Two Stroke

1) Engine(s) must not exceed a total of 100 cubic inches in displacement as originally manufactured. A tolerance of 3ci will be allowed for overbore.

2) Gear cases may be modified; however, low water pickups are not allowed, and the original location of the water pickup must be maintained. Gearcases must have a skeg and be shiftable from the driver's seat.

3) All engine exhaust must travel into the down housing; no open exhaust stacks are allowed.

4) Flywheels may not be modified in any way.

B. Four Stroke

1) The only legal four stroke engine allowed shall be the Mercury 2.1 L, four-cylinder engine produced 2014 and later.

2) Engine must be run in its stock form with no modifications to crankcase assembly, cylinder head, intake, exhaust, flywheel, etc

3) Legal modifications:

a) Flashing of the engine ECM with the "Tri hull update" to be performed by Mercury Racing IHRA F1PC may mandate any competitor to run a series owned ECM at any time.

b) Plastic fairing on engine may be removed.

c) Engine cowling can be modified. Air dams can be modified. A hole, not to exceed 8"W x 3"T can be cut under the grab handle on the rear of the cowling.

d) Gear case may have exhaust hole cut above the cavitation plate and below the mating surface to the midsection. The hole shall not exceed 3.5"W x .75"T.

e) Solid engine upper motor mounts are required. Solid engine lower motor mounts are permitted. Available for purchase from Bob's Machine or Mercury Racing.

f) Gear case water screens may be modified, but not moved.

g) Either 2.07:1 OR 2.38:1 RIGHT HAND gear cases are permitted.

7. CLAIMING RULES

A. A $3,500 claiming rule is enforced for all officially entered two stroke engines and a $10,000 claiming rule is enforced for all officially entered four stroke engines. This claiming rule includes the engine, trim system, mounting bracket (jack plate) and propeller exactly as raced. This claim must be made in cash. Claims may be made between the final heat and the awards ceremony, or one hour after the final heat, whichever comes first.

B. Only drivers who have competed for a full calendar year and participated in the event on the day of the final shall be allowed to claim an engine.

C. Any one driver's engine can only be claimed twice in a racing season.

D. Any driver can claim only one motor in a racing season.

E. In the event that a driver's engine is claimed and he/she does not surrender it, then that driver is disqualified from that event and is suspended from all tri-hull racing for one calendar year.

8. MANAGEMENT

A. IHRA reserves the right to alter or amend these rules at any point.

TRI HULL ROLL CAGE

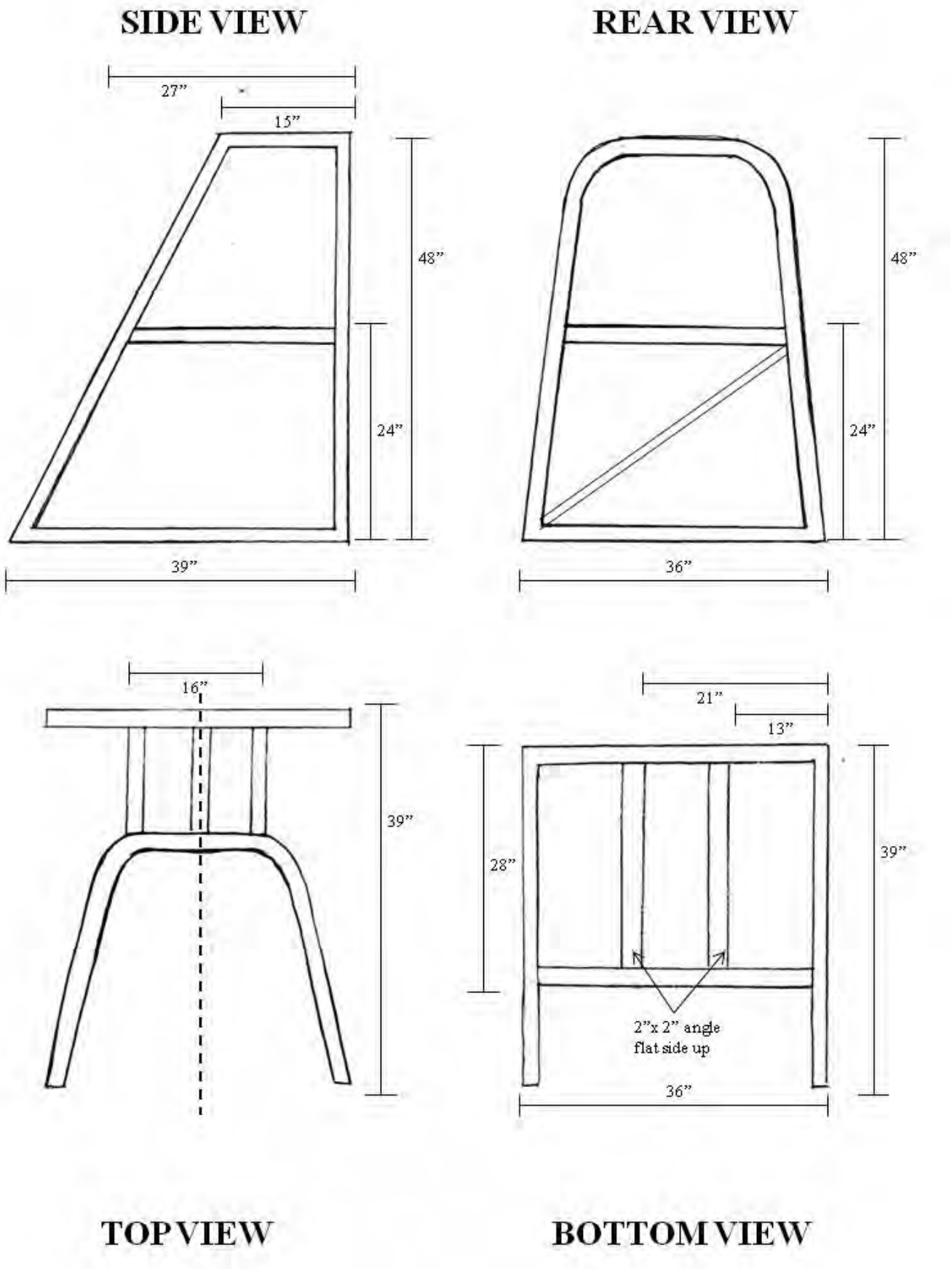

FORMULA 1 ENGINE

The spirit and intent of these technical rules is to provide for a fair and equitable competition. The level of competition, money involved and TV exposure leave no room for anyone that wants to operate outside of the intent herein. The race committee reserves the right to interpret the intention of anyone that violates these rules and impose appropriate penalties.

These rules are subject to change anytime by approval of IHRA FCPC.

	MERC 2.0L CARB	MERC 2.5L CARB	MERC 2.5L OPTIMAX	MERC APEX 200 4 STRK	MERC APEX 250 4 STRK
RPM LIMITER	NONE	NONE	STOCK	6800	6800
GEARCASE	MERC	MERC	MERC	MERC	MERC
TOTAL WEIGHT (LBS)	1100	1175	1200	1225	1265
BOAT MIN LENGTH (FT)	16	16	16	16	16

MOTOR FUELS

F1- VP Racing Fuel MS98L (2 stroke) & C9 (4 stroke) is the series class spec fuels and the only legal fuels for the class, It must be purchased at registration at each event. It may be mixed with Petroleum based or Synthetic Oil complying with Series Standards.

All Classes other than F1

Only motor fuel consisting of non-oxygenated standard pump and racing gasoline, shall be used. Petroleum based and/or synthetic oils may be added to the fuel. Fuel samples may be taken before launching and during inspections for on site and off site analysis. On site testing will be performed using a Digatron meter zero reading, or below, at ambient temperature. Fuel cooling will not be allowed. Fuel testing will be made available to all contestants 2 hours prior to testing and racing. It is the race team's responsibility to ensure that the fuel meets aforementioned requirements regardless of where the fuel is purchased. At each regatta the inspector may purchase samples of local gasolines, mix it with TCW-3 oil at a ratio of 20 to 1 and test it accordingly. If the test fuel exceeds these testing thresholds, the new thresholds will become the maximum limit of the day. The source and grade of gasoline must be announced when registration opens. A contestant appealing a fuel disqualification must bear the expense of the fuel analysis and handling. The use of the following substances greater than that allowed in commercial gasoline by the current EPA upper limits are forbidden to be present in gasoline during any IHRA event: Acrylonitrile, Aminodipheryl, Aniline, Benzene, Benedine, Beryllium compounds, Bromine compounds, Chromoethylether, Chlorine compounds, Ethylene oxide, Hydrazine compounds, Manganese

compounds, Nitrobenzene, Nitrochlorobenzene, Nitrogen compounds, Nitrodipheryl, Propylene oxide and Tert Butyl toluene. The penalty for a first violation will be disqualification from the race and a two-year suspension. A second offense will result in a lifetime suspension. The IHRA reserves the right to send off confiscated fuel samples for third party evaluation at the team in questions expense.

FORMULA 1 MERCURY 2.5L CARB

Engine block is a 5 petal front half 2.5L 200hp painted block. No Pro Max blocks, no O'Ring head blocks. The intent is to treat this motor on the same basis as the SST 120 motor, if you can't change the 120 motor you can't change this motor. All parts will be as homologated on the SST 120 with the exception of block, crank, rods, pistons, carburetor plate(s), heads, and Flywheel. It is also designed so that you can put all SST 120 components (dressing) on the 2.5L short block.

1. Please note there are 2 possible exhaust chests; the small exhaust chest dimensions are as follows:

   1.03 inches (width) 2.50 inches (height) max. The large exhaust chest dimensions are as follows: 1.10 inches (width) 3.09 at the runner depth max. Absolutely no grinding or blending in the exhaust chest area.

2. Must use top guided rods either stock fishing motor rods or Mercury Racing 280 rod or F1 rod (Chatfield). No modifying or grinding It is recommended if you use fishing motor rod that you use rod bolt # 10-848475.

3. The only legal pistons are listed below. Piston must be run as supplied with two rings, no grinding or modifying.

	STD PORT	**STD STBD**	**.010/ .015/ .020 PORT**	**.010/ .015/ .020 STBD**	**.030 PORT**	**.030 STBD**
MERCURY	785-9737T9	785-9738T9	785-9737T10	785-9738T10	N/A	N/A
WISECO	3137PS	3137SS	3137P2	3137S2	3137P3	3137S3
PRO MARINE	2500PV	2500SV	2515PV	2515SV	2530PV	2530SV
VERTEX	V2500P	V2500S	V2515P	V2515S	V2530P	V2530S
WSM	100-20PK	100-20SK	100-20-04PK 100-20-045PK 100-20-05PK	100-20-04SK 100-20-045SK 100-20-05SK	100-20-06PK	100-20-16SK

4. Any Mercury production crank is allowed, with the exception of a Mercury crank with heavy metal welded into it (no late model race cranks). No grinding or modifying.

5. The recommended replacement sleeve is the cast iron Advanced Sleeve #1041. No grinding ports.

6. The V-6 crankshaft centerline to crankcase/intake manifold surface to be 4.42 +/- 0.01 inches.

7. Intake manifold thickness is 2.0000 +/- .015 (between carb and reed block). No grinding

8. Cylinders bored to +0.030 inches oversized must have port heights that measure .015 lower than standard bore.

9. Reed blocks are 10 port = 1.10x.056 or 8 port = 1.05x0.63 reed blocks are allowed with no modifications or grinding. 10 port are tear drop shaped port.

10. Any reed material is accepted.

11. The only legal carbs are cast or stamped with WH, carb must have slosh tubes and baffles no other modifications. Carburetors may be confiscated by the inspector at any time during the racing weekend. They will be held for inspection and testing.

12. The only allowed cylinder heads are manufactured by Mercury Marine using the lost foam method. The head must maintain stock combustion chamber configuration and appearance. No O-ring heads are allowed. Cylinder head combustion chamber volume must not be less than 30 cc. Bottom radius must be .250". Head combustion volume (30 cc) measured using the flat-plate method with the standard BUHW spark plug installed. The minimum distance from the head parting surface to the piston is .040 inches. A micrometer or Vernier Caliper will be used to determine the thickness of the head gasket just removed from the inspecting engine. A bridge tool will be used to measure the piston protrusion from the block. The piston protrusion is subtracted from the gasket thickness. An average of all 6 cylinders will be calculated to determine the final dimension. Final dimensions must be .040 inches or greater to be considered legal.

13. The SSM #6 and #4 are ONLY allowed gearcases. Gearcases must run gear ratios as manufactured. Gear cases must run both shafts as manufactured. Gear Cases must meet all SST-120 Race Class dimensions.

14. No grinding or blending on the blocks! No blending ports or passages! If the factory didn't touch it, it shouldn't be touched.

15. Must use stock 120 style exhaust chest cover

16. Crankcase drain lines may or may not be utilized.

17. Power Performance and Buckshot Racing's Carb intake plates are a legal replacement for the OEM intake, any color.

18. Aftermarket Flywheel must meet the OEM design intent, configuration and minimum weight as the SST120 class rules. Is intended for racing purposes only; Is produced by a manufacturing supplier in the business of manufacturing flywheels; Is readily available and produced in minimum quantities of 20 units. Power Performance Engineering Flywheel has met this requirement

Tuner: SST120 or Optimax 2.5L tuners must be as produced except as noted below.

A. Optimax 2.5L tuner when used on a carb 2.5L engine is allowed to block off the water dump area from the poppet valve.
B. Early SST120 tuner with a ½" water supply passage may be increased to ¾" water supply passage to mimic later tuners.
C. Tuner may have the water dump holes modified to "dry stack" the tuner.
D. No welding to the tuner is permitted.

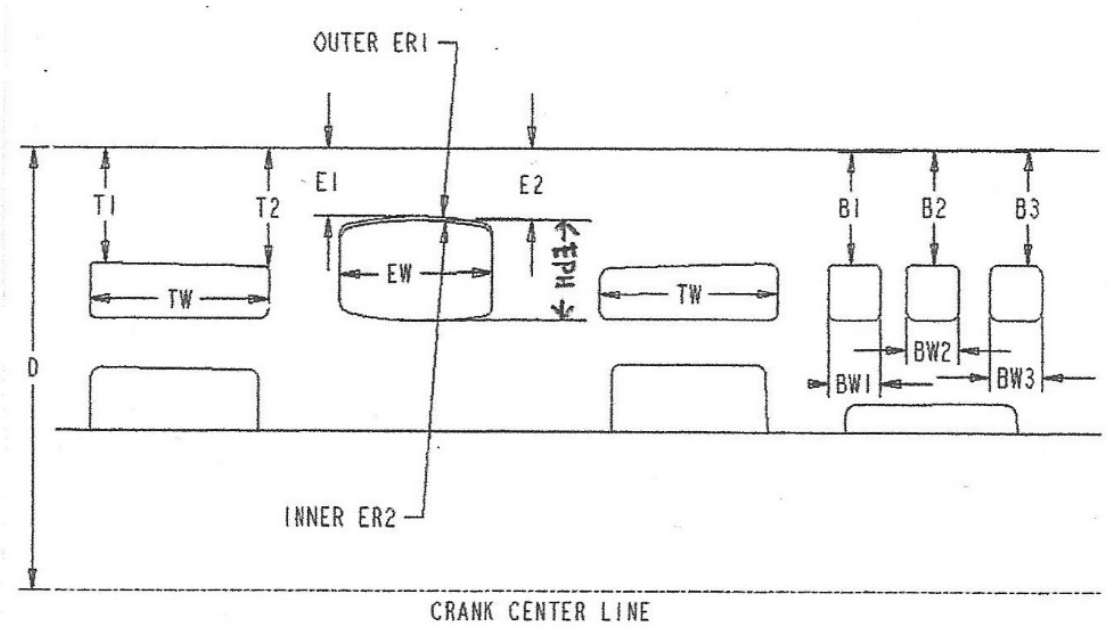

B1 2.1 Min. BW1 0.7 Max.
B2 2.1 Min. BW2 0.94 Max.
B3 2.1 Min. BW3 0.7 Max.
Rod Length +/- .006 5.500
Flywheel Min. lbs. 6.6lbs.
T1 2.140 Min

T2 2.180 Min.
TW 1.75 Max.
E1 1.470 Min.
E2 1.560 Min.
EW 2.37 Max.
EPH .950 Min.

Mercury 200 hp
Class Displacement 153.0
Venturi 1.312 +/- 0.015
Carburetor Bore 1.562 +/- 0.015
Carb Quantity per Engine 3

Cylinder Bore 3.501 +/- .003
Piston Stroke 2.650 +/- .011

FORMULA 1 SST-120
SST-120 Technical Standards must be as homologated with the below exceptions.

1. SST 120 head may be cut to minimum head pocket depth of 0.405 all other measurements will stay the same. No fully Machined pockets.

2. May run any tuner.

3. May run any piston, as long as it meets OEM dimensions.

4. May run a light weight flywheel.

5. All other rules for SST 120 apply.

NOTE- THE TIGHT HEADS ARE 23CC, IT IS RECOMMENDED TO RUN SHORT REACH PLUGS WITH THIS SET UP.

FORMULA 1 SST-200
SST 200 TECHNICAL STANDARDS.

SST 200 Boat Standards - Any design of boat including bottom, deck, cockpit openings and seating arrangements is permissible so far as boat meets minimum length and weight.

Power trim and/or adjustable spoilers shall be allowed in Super Stock.

SST 200 Engine Technical Standards must be as homologated with the below exceptions.

1. Engine Cowling and pan must retain the OEM shape and remain black in color with Mercury designation. Cowling, pan, and hardware can be aftermarket.

2. The SST 200 class can not change engine wiring and starting, must remain as manufactured 12-volt starting system.

3. The SST 200 class gear cases may have their outside surfaces refinished; however, they must meet the Engine Homologation Specification sheets and original design.

4. PCM to remain completely stock including fuel map, ignition map and RPM limiter. At the referees discretion a"Lottery" may be used at any given time from the series Mercury PCM's. In the event of the PCM lottery the teams will receive and install the PCM prior to entering the water, removing the PCM once the boat is back on the trailer prior to returning to their pit area. Teams agree to only run the inspector designated PCM, any other PCM will be deemed illegal. In the event said PCM is damaged or gotten wet the team will be billed dealer cost to replace. In the event the team needs to plug into the data port of the PCM, the inspector must be present and only the series data tool will be allowed. The inspector reserves the right to reset the run history at any time.

5. All OEM sensors must be fully functional at all times, Inspector reserves the right to test by any means for validation of any associated OEM parameters.

6. Exhaust tuner must run as originally manufactured and designed, no drying , water removal, or altering of any kind.

7. During competition no smart craft or data port connections to the engine will be allowed. A inductive tachometer wire connected to a single spark plug lead will be allowed.

8. A maximum of 2 qty. 12 volt batteries.

MERCURY RACING APEX 200, FOUR STROKE
Refer to the Homologation Specifications Document

Minimum Weight (boat, driver, equipment as raced)	1,225 lbs
RPM Limiter	6,800
Gearcase, Mercury IV SSM w/Overdrive	15:17
Overdrive Ratio (only legal ratio)	.818 (22:18)
Final Drive Ratio	0.927
Minimum Boat Length	16’

Engine must retain factory powerhead seal at all times.

Engine must have series powerhead seal at all times.

The Only Authorized Rebuild Center- Mercury Racing Exchange program.

No performance enhancements through 12/31/2026.

No Modifications from homologation specifications data.

Modification and/or relocation of factory engine sensors is prohibited.

Components provided with the engine but mounted within the boat (i.e. fuel supply module) cannot be modified.

No additional connections or ducting between the engine cowling and throttle is allowed.

PCMs for use at a competition event will be held by the competitors. The serial numbers of each PCM and which boat they have been designated for shall be recorded.

At any time, an IHRA official may collect a competition PCM for the purpose of checking the calibration for modification.

ENGINE COWLING

1. Cowling may be replaced or repaired by a facsimile of identical size and dimension. Finish must be black or exposed carbon fiber. Front air inlet and rear air exhaust vents must remain, with identical location and crosssectional area. No additional air inlets, scoops, deflectors, or wings are to be added. Color matched factory duplicate decals are permitted.

MERCURY RACING APEX 250, FOUR STROKE

Refer to the Homologation Specifications Document

Minimum Weight (boat, driver, equipment as raced)	1,265 lbs
RPM Limiter	6,800
Gearcase, Mercury IV SSM w/Overdrive	15:17
Overdrive Ratio (only legal ratio)	.818 (22:18)
Final Drive Ratio	0.927
Minimum Boat Length	16’

Engine must retain factory powerhead seal at all times.

Engine must have series powerhead seal at all times.

The Only Authorized Rebuild Center- Mercury Racing Exchange program.

No Modifications from homologation specifications data.

Modification and/or relocation of factory engine sensors is prohibited.

Components provided with the engine but mounted within the boat (i.e. fuel supply module) cannot be modified.

No additional connections or ducting between the engine cowling and throttle is allowed.

PCMs for use at a competition event will be held by the competitors. The serial numbers of each PCM and which boat they have been designated for shall be recorded.

At any time, an IHRA official may collect a competition PCM for the purpose of checking the calibration for modification.

ENGINE COWLING

1. Cowling may be replaced or repaired by a facsimile of identical size and dimension. Finish must be black or exposed carbon fiber. Front air inlet and rear air exhaust vents must remain, with identical location and crosssectional area. No additional air inlets, scoops, deflectors, or wings are to be added. Color matched factory duplicate decals are permitted.



INSPECTION PROCEDURES FOR MERCURY 250/200 APX MOTORS

A. During pre-race inspection verify that the Speed Link module is installed. This module is required for post-race inspection.

B. FACTORY SEALS

1) They are found on each cylinder head valve cover and crankcase.

2) Note each seal's serial number for future reference

3) Air-take plenum and/or engine lower cowl may need to be removed to gain access to the crankcase seal.

C. LOWER UNIT

4) Measure the lower unit

5) Check gear ratio

6) Remove lower unit, remove overdrive/water pump assembly, open the overdrive count gears a. With the use of a degree plate measure the gear ratio at the propeller shaft (recommended)

D. Using ***Speed Link*** verify that the ECU passes diagnostic test. *Speed Link* is found in your App Store. Live engine data retrieval requires a *Speed Link* module.

FORMULA LIGHTS BOATS STANDARDS

1. Any design of boat including bottom, deck, cockpit openings and seating arrangements is permissible so far as boat meets minimum weight and length.

2. Power trim shall be allowed in Super Stock classes, except up/down lift adjustable while boat is underway for the Formula Light class.

3. All cowling and engine graphics and colors shall be essentially the same as OEM, with updating to later models allowed only as a complete OEM design.

4. Formula Light drivers must be seated in a seat.

FORMULA LIGHTS (SST45) TECHNICAL STANDARDS

Max. Total Cu. In. Displacement	Min. Boat Length	Min. Boat Weight
44.9 (740cc)	12’	700 lbs.

FORMULA LIGHTS (SST45) MOTOR STANDARDS- THE SST45 IS TO BE RACED AS HOMOLOGATED

1. Sea-Way Marine is recognized as the manufacturer for this class.

2. Formula Lights class is restricted to only one 12-volt battery only.

3. Formula Lights class gearcases may have their outside surfaces refinished but must meet the requirements of Homologation Specification sheets and the original design. The outside surfaces of the gearcases may be either painted or unpainted. If they are painted, the color of the paint must be the same as the original factory motor color. If the gearcases are unpainted, any surface finished is acceptable.

4. Formula Lights class may use alternate plastic reeds - OMC part number 568529 or Boyesen part number SST45.

5. Formula Lights class shall use only one propeller of three blades or less.

6. Formula Lights engines may have a substitution of a maximum of 2 sleeves of any manufacturer with original porting specifications and the same material will be allowed for repair of damaged cylinders.

7. Formula Lights carburetor throttle plate screw is a non-inspectable item.

8. CLARIFICATION: The as-cast pocket width of the 325603 head to be 0.270+/-0.010. Depth minimum is 0.515. (See Tech manual for drawing)

Notes:

The rope flywheel 8.1 lbs reference removed from chart. Only the electric start flywheel is allowed.

The OMC plastic parts are no longer available; this is a replacement manufactured by Sea-Way Marine.
Either type or combination may be used of the brass midsection bushing located at the top and bottom.

1. CYLINDER BLOCK

Since there are no new blocks, 40,50,55 and 60 hp production "fishing" blocks are being used to make SST45's. You must use an SST45 type spec sleeve which will not have an exhaust relief hole above the exhaust port. It is permissible to have the exhaust relief hole in the aluminum portion of the block. Sleeve suppliers include BRP, Advanced Sleeve and LA Sleeve. All can supply SST45 cylinder sleeves. The lost foam blocks never had any hand grinding in the block. NO grinding is allowed in these blocks. The permanent mold blocks did have grinding in them as they came from the factory. There may be casting flashing on the bottom side of the transfer ports. It is permissible to grind the flashing on the bottom side of the transfer to get the aluminum to line up with the cylinder liner instead of restricting the port. Grinding can only be done on the lower 50% of the port. NO grinding is permitted on the top of the port to improve flow. This grinding only refers to Transfer Ports, NOT Boost or Exhaust.

CRANKSHAFT

The crankshaft for the SST45 was prepared for racing by hand grinding a radius on the top crankpin hole. The intent was to remove any potential stress riser to improve crankshaft durability. When using a replacement production "fishing " crankshaft it is advisable to duplicate this feature. Newer Crankshafts have a larger diameter spline on the bottom. These may be used, however, you must use a new style matching driveshaft and cut it to fit the gearcase.

CONNECTING ROD

The SST45 connecting rod was produced with no oiling hole in the rod cap. The hole was left out in an effort to produce a more durable part. New SST45 rods are no longer available and the OPC Motor Technical Committee and OPC Racing Commission have approved use of the production "fishing" rod. This rod has an oiling hole in the rod cap. It is permissible to chamfer (radius) the edges of this hole to remove any potential stress riser and improve durability. See Note #10 and photographs in technical specifications.

PISTON AND RINGS

There is only one model of SST45 piston available in standard bore and 0.030 oversize. This OEM cast piston uses a top Keystone ring and a rectangular lower ring. There is a newer part with different rings which is NOT legal. After market pistons are not legal. See OEM piston identification information.

CARBURETOR

If the original carburetors throttle shaft bore wears out it may be repaired by sleeving (Note #16). Any three (3) jet style production "fishing" carburetor of the same bore and venturi specification is permissible. The production carburetors do not have full throttle plates which causes the engine to idle faster. If you decide to change the throttle plate take care not to damage or change the shaft.

Screws and full throttle plates are available from Sea-Way Marine. The throttle plate screw is no longer an inspectable item, however the throttle plate and shaft must remain as homologated. It is recommended to use the full throttle plate. The Choke arm may be removed. Carburetor linkage is a homologated part of the SST 45 and must remain as approved.

GASKETS, IGNITION, AND MISC.
OEM gaskets are available. Ignition components may be OEM, Sierra, CDI, must function as intended, and must meet the same specification as OEM parts. Any bearings, seals, impellers, gaskets are allowed as long as they meet the same design intent and configuration of the OEM parts. (Must be of same design and thickness as OEM).

CENTER SECTION, TUNER, AND ADAPTOR
Driveshaft housings may be used from production "fishing" engines. The "fishing" housings need to be altered to exactly match the SST45 part. The exhaust outlet/relief must be the same as the SST45.

ENGINE COVER AND PAN
New style approved upper and lower motor covers are available from Sea-Way Marine. When using the new style motor covers a new Sea-Way Marine throttle cable mount is required. This mount may also be used with Old style covers. Installation of the new lower motor cover requires drilling and tapping three l/4x20 holes. Note #13.

SWIVEL BRACKET
The OMC plastic parts are no longer available; this is a replacement manufactured by Sea-Way Marine. Either type or combination may be used of the brass midsection bushing located at the top and bottom.

SST-45 NOTES

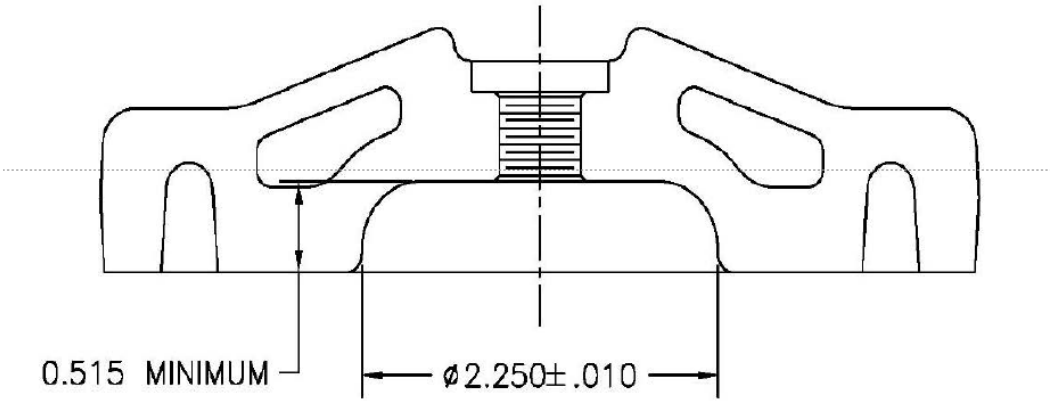

1. Incorporates .012 shims under one or both reed stops.

2. Bi dimension to top of chamfer = 1.624 minimum.

3. Standard SST 45 reed material is Steel .010 thick. H = .268 maximum.

Alternate reed for SST-45 may be used: OMC P/N 568427, bottom reed = .028 ±.003; top reed .017±.003, H =.290 maximum.

4. Or per OMC P/N 561086 template, included in Kit P/N 568053.

5. Crankcase thickness (split line to reed gasket surface) 4.355" minimum.

6. Approve Replacement Ignition parts: CDI Electronics, Stator 173-2926K1, Charging Coil 173-1670, Power Pack 113-2285, Rectifier 153-1778, Coil 183-2508, Trigger 133-3387

7. The Compression Volume is 35cc installed to top of plug hole.

8. The only legal Cylinder heads have casting numbers of 325602 or 325603

9. Head Gasket minimum thickness is .042

10. Standard SST 45 connecting rod has no oiling hole in the rod cap.

Alternate connecting rod (fishing motor rod) for SST 45 may be used: this rod has an oiling hole in the rod cap.

It is permissible to chamfer (radius) the edges of the oiling hole. (See Photo's Below)

11. The use of new larger spine cranks and Drive Shafts is permitted.

12. Port Measurements from Block Deck to top to Port. (See Table Below)

13. New design Upper Cowling, Lower Pan and Throttle Bracket as supplied by Sea-Way Marine are approved replacements. Throttle bracket may used with any cover/pan.

14. The electric start flywheel is the only legal flywheel, min. weight 9.1 lbs.

15. Brass bushings for the midsection as supplied by Sea-Way Marine are approved replacements. The bushing used in the top and bottom of the swivel bracket may be plastic (OMC) OR brass (Sea-Way Marine).

16. Carburetor throttle shaft bore may be repaired by sleeving.

RACE CLASS: SST-45

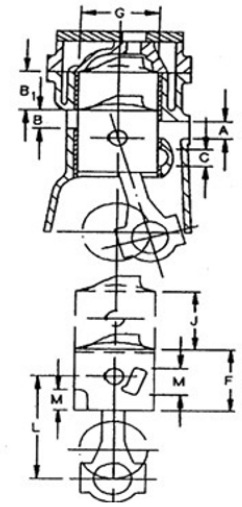

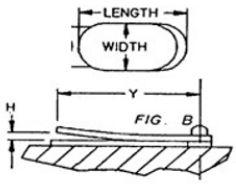

MANUFACTURER						OMC		
ADVERTISED SALES NAME						JOHNSON / EVINRUDE 45SS		
CLASS; DISPLACEMENT MAX					in^3	SST-45; 44.9		
NUMBER OF CYLINDERS						2		
MIN. VOLUME OF COMBUSTION CHAMBER (INC'L SPARK PLUG HOLE)					cm^3	35.0		
CARBURETOR		VENTURI		□.015	in	1.250		
		BORE		□.015	in	1.500		
		QUANTITY PER ENGINE				2		
POWERHEAD SPECIFICATIONS	G	CYLINDER BORE		□.005	in	3.187 +.035	OEM +.030 psiton is	Approved
	J	PISTON STROKE		□.011	in	2.820		
	L	ROD LENGTH		□.006	in	4.750		
	K	DECK HEIGHT		□.012	in	7.575	7.563 Min.	
	F	PISTON LENGTH		□.030	in	2.973		
	M	PORT HEIGHT		□.030	in	2 @ .615		
	NUMBER OF PORTS PER CYLINER		A	TRANSFER		3		
			B	EXHAUST		1		
			C	PISTON		--		
	PORT HEIGHT		A	TRANSFER	□.035	in	2 @ 0.584; 1 @ .546		
			B	EXHAUST	□.035	in	1.107 (plus chamfer)	See note #2	
			B_1	EXHAUST	□.035	in		See Table in Notes	
			C	PISTON	□.035	in	--		
	PORT TIMING		A	TRANSFER	□2□	ATC	2 @ 118□; 1 @ 120□		
			B	EXHAUST	□2□	ATC	92□		
			C	PISTON	□2□	ATC	--		
	REED BLOCK (ONE CYLINDER)	# OF PORTS					8		
		LENGTH x WIDTH SIZE OF PORTS			MAX	in	1.41x0.675		
		REED MAT'L					STAINLESS STEEL	See Note # 3	
		REED THICKNESS			□.001	in	.010		
		H	REED STOP HGT.		MAX	in	.268	See Notes # 1 & # 3	
		Y	CHECKING DIS.		□.030	in	1.427		
	WEIGHT (ONE SET)	FLYWHEEL			MIN	lbs	**9.1**		
		PISTONS, RINGS, ROD, WRIST PIN, SPACERS, BEARINGS			MIN	lbs	1.7		

WARNING! FOR INSPECTION ONLY! These specifications are not intended as a guide for modification or "blueprinting" and are subject to change as needed.

RACE CLASS: SST-45

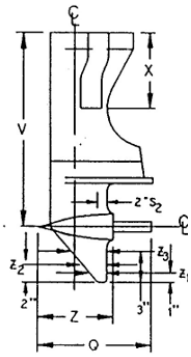

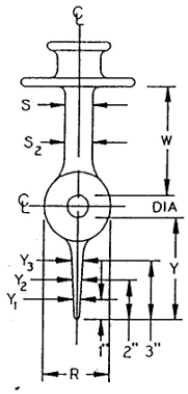

MANUFACTURER						OMC		
GEARCASE MODEL IDENTIFICATION						DR-39M		
ADVERTISED SALES NAME						JOHNSON / EVINRUDE 45SS		
GEARCASE SPECIFCATIONS	GEAR RATIO					18:18		
	X	EXHAUST TUBE LENGTH- POWERHEAD BASE TO PRIMARY TUBE END		□.25	in	9.37	Measurment does not include 3/8 plate. Pipe only	
	Q	TORPEDO LENGTH (W/ PROPSHAFT)		MAX	in	16.3		
	R	TORPEDO WIDTH		MIN	in	2.35		
	S	STRUT WIDTH		MIN	in	1.40		
	S_2	STRUT WIDTH (2" FORWARD OF TRAILING EDGE		MIN	in	--		
	W	DIS. FROM PROPSHAFT TO CAVITATION PLATE		□.2	in	4.16		
	Y	LENGTH OF SKEG FROM PROPSHAFT		□.2	in	4.54		
	Z	TORPEDO LENGTH		□.2	in	13.7		
	V	PROPSHAFT CENTERLINE TO POWERHEAD BASE	LONG SHAFT	□.2	in	--		
			SHORT SHAFT	□.2	in	17.1		
	Y_1	SKEG THICKNESS		MIN	in	.21	See note # 4	
	Y_2	SKEG THICKNESS		MIN	in	--		
	Y_3	SKEG THICKNESS		MIN	in	.34	See note # 4	
	Z_1	SKEG CORD LENGTH		□.2	in	3.950	See note # 4	
	Z_2	SKEG CORD LENGTH		□.2	in	--		
	Z_3	SKEG CORD LENGTH		□.2	in	5.700	See note # 4	
	DIA	PROPSHAFT DIA		□.01	in	.685		
		Adaptor Plate Water Outlet Hole (DIA)		□.01	In.	.190		

SST 45 Ports

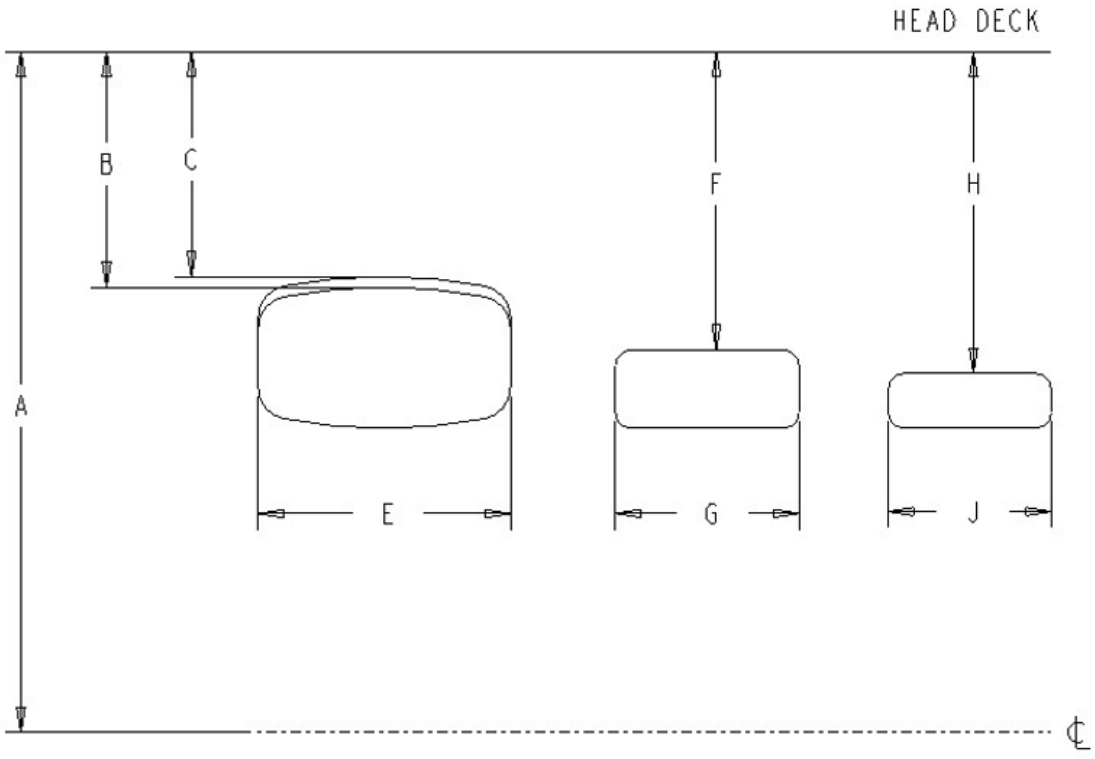

	Port Measurements from Block Top Deck down to Top of Port			
	SST 45	Minimum	Maximum	
		Inches	Inches	
A	Deck Height	7.563	7.587	
B	Exhaust Port	1.730	1.765	
C	Exhaust Port Chamfer	1.624	1.720	
E	Exhaust Port Width		1.910	
F	Transfer Port	2.228	2.280	
G	Transfer Width		1.470	
H	Boost Port	2.250	2.325	
J	Boost Port Width		1.210	

Standard SST45 Connecting Rod:



Alternate (fishing motor rod) Connecting Rod:



Date: 02-25-2015
Model Year:

Lower Pan PN 560500*

Lower pan is completely sealed at base and has three opening's.

Outlet Water Hose from PH – 13/16" (Note Sealed by outlet hose -reference)
3/8" Drain hole in back of pan. (Reference)
Opening for cable in front of pan (Approximately 1.4" – but may vary - reference)

***These parts supplied by Sea-Way Marine, Inc.**







Note: revised to allow use of alternate connecting rod from fishing motor.

Upper cowling PN 560500*

Vent in back of cover top - PN 560401* (Hole Diameter 2” reference)

Louvered Vent front cover plate PN 560402* total dimension 4.55" H x 5" W (Reference)
Rectangular opening behind front plate Maximum 4" W x 3.75" H - Minimum 3.25" W x 2.4" H
Opening for Throttle Cable (Approximately 1” W x 2.5” H reference)
Opening for Cables (Approximately 1.4”)

***These parts supplied by Sea-Way Marine, Inc.**











Throttle Bracket PN 560330*

Thickness – 3.75" +/- .005" (Reference)
Opening – 1.500" +/- .010" (Reference)
(Note: 1/32 Edge on opening – otherwise straight in - reference)

***These parts supplied by Sea-Way Marine, Inc.**

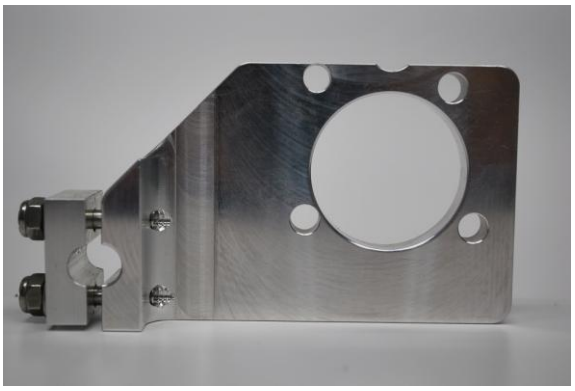

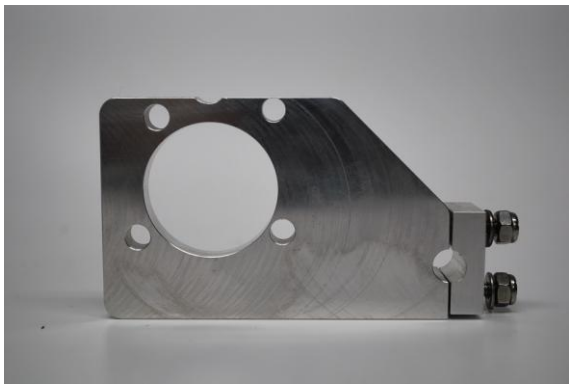

Midsection Bushings	Current PN	New PN	(NO Photograph of bushing)
Upper Bushing	309967	560100*	
Lower Bushing (Lg)	332663	560101*	
Upper Cover	309966	309966	
Lower Cover	397736	560102*	
Upper O'Ring	301917	201875	
Complete Bushing Replacement Kit		560202*	

***These parts supplied by Sea-Way Marine, Inc.**

OEM Piston - PN 396581

Distinctive OMC/BRP lettering on the top. No Boss on the wrist pin area of casting





OEM Piston - PN 5006665

Distinctive OMC/BRP lettering on the top. No Boss on the wrist pin area of casting





OEM Piston - PN 391417

Distinctive OMC lettering on the top. No Boss on the wrist pin area of casting





Pistons:

Pro Marine Piston – Looks identical to the OEM Piston – Notable differences is the stamped lettering on the top of the piston (Extra dimensional number's and the fact that the sizing runs horizontal to the "UP" lettering). Secondly note casting Boss on the on the wrist pin area– RH side in photo





Wiseco Piston:

Distinctive lettering on top of piston





Exhaust housing approved repair kit available from Sea-Way Marine.

FORMULA LIGHT EXHAUST HOUSING REPAIR:

Exhaust housing approved repair kit available from Sea-Way Marine due to issues some drivers have experienced with the rear boss in the exhaust housing cracking and breaking. This boss is required to remain in place for the exhaust housing to be legal. Competitors have had to weld the boss or in some cases replace the exhaust housing.

An example of a stock (legal) SST45 Midsection rear boss.

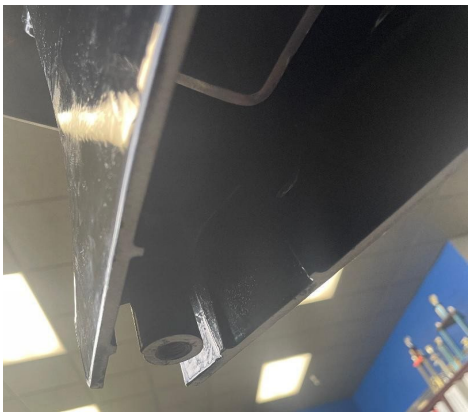

An example of an Illegal SST45 Midsection where the boss for the rear lower unit bolt has been removed or broken off.



A SST45 Midsection with the Sea-Way Maine replacement kit installed. It is the exact diameter as the stock cast boss and is a legal repair while providing lower unit support.



Sea-Way Marine repair kit. Depending on the failure there are two replacement parts available.one on the left would be for an install where you still have threads in the remaining part of the original boss. This could be cut to length and the appropriate bolt would be provided. The one to the right would be used where there are no threads or not enough threads remaining to attach. This would also be cut to length and the stock bolt could be used.



OUTBOARD MOTOR STANDARDS

1. An outboard motor is defined as a complete internal combustion power and propulsion unit that can be attached to a boat and which can be lifted bodily from the hull as one unit. Batteries used for ignition and starting, tachometer, throttle control and steering arrangement are excepted.

2. A manufacturer of outboard motors is one who filed specifications and is responsible for the original design and manufacture of the following: crankshaft, connecting rod, cylinder head, cylinder, crankcase, gears and valving arrangement, and who complied with such other requirements as provided by these rules. Manufacturers may be of either foreign or USA (domestic) origin, and motors must be or have been available in the USA through dealer networks.

A. Motors must be the product of a recognized manufacturer engaged in the production of outboard motors offered for sale to the public.

B. There shall be no alterations of parts except for spark plugs, carburetor jets, and propellers, or specific parts approved by the IHRA F1 Powerboat Series Technical Committee. The intention is to race the engine exactly as manufactured and without special performance boosting accessories. The gearcases on motors raced in Stock classes must be raced with either the same surface coating or paint as supplied by the manufacturer, or with no surface coating or paint over part or all of the surface of the gearcase casting, but the smoothness of the metal surface must under no circumstances be better than that supplied by the manufacturer.

C. No special parts or interchange of parts will be allowed, unless approved by the IHRA F1 Powerboat Series Technical Commission.

D. In all classes the trim tab, thrust and locking washers may be altered or removed from the lower unit to permit the use of any propeller, thrust washer or nut.

E. Cylinder head and power head attaching studs may be substituted for bolts.

F. Electronic engine RPM limiting devices may be eliminated only where specific rules allow.

3. Stock Outboard Engines are defined by the models that comply with the below guidelines:

A. All engines in Stock classes must be capable of shifting into forward, neutral, and reverse from the driver's seat, with one hand on the steering wheel, by electric or mechanical method at all times.

B. Are manufactured in annual or model year quantities greater than 250 units.

C. Are intended for sale to and to be used by the public.

D. Are advertised through the same media, in the same publications and given the same prominence as the manufacturer's other engines.

E. Are distributed through the manufacturer's retail outlets.

F. Are not equipped with an accessory or high-speed gearcase.

G. Are equipped with standard under-cavitation plate or through-prop exhaust.

4. Super Stock Outboard Engines are defined by the models that comply with the below guidelines:

A. Are manufactured in annual or model year quantities of more than 25 units.

B. Are not necessarily intended for sale and to be used by the general public.

C. Are not necessarily advertised through the same media, in the same publications and given the same prominence as the manufacturer's other retail engines.

D. Are not necessarily distributed through the manufacturer's retail outlets.

E. Accessory gearcases, as submitted by the manufacturer, may be used on these engines if they are built in annual quantity totals of at least 25 quantity or more.

F. Exhaust stacks not contained in the driveshaft housing will not be permitted.

G. Standard factory production models may run in Super Stock classes.

H. No Stock or Super Stock motor shall be eligible for IHRA racing prior to the IHRA F1 Powerboat Series Technical Committee's approval.

5. Engines running in Stock and Super Stock classes may only be raced in the approved IHRA configuration.

REPLACEMENT PARTS

1. Only parts are permitted equivalent to standard production OEM parts used to the produce the motor as obtained from a dealer as a stock item, electrical, electronic products as approved by the IHRA F1 Powerboat Series Technical Committee, and available to the public through a dealer network. These products cannot provide any performance advantage over original OEM parts.

A. No replacement part for current OEM production motors will be considered standard production unless this part appears on the current production motors available for purchase through the manufactures dealer network.

B. Engine components are of two categories: primary and secondary parts.

1) Primary components consist of: Block and crank case assembly; cylinder head; crankshaft; connecting rods; pistons; wrist pins; induction system; reeds; cooling system as designed; midsection; exhaust; and gear case assembly. No alterations of these components are allowed unless specified in the class rules. Primary parts must be OEM for the model.

2) Secondary components consist of: Bearings; seals; impellers; cylinder sleeves; gaskets (must be same design and thickness); fuel lines and fitting; ignition wires (high tension) and caps or boots. Secondary parts may be of any manufacture and must be of same design intent and configuration as the OEM parts.

C. Any replacement part for non-current OEM motor (motors no longer produced by the OEM) shall be approved only after the part being replaced is no longer available for the motor model from the OEM or is specifically approved by the IHRA F1 Powerboat Series Technical Committee.

D. Final approval of non-OEM electrical or electronic parts approved for use in IHRA racing shall not be given until the Chairman of the IHRA F1 Powerboat Series Technical Commission is satisfied that all provisions of the rule have been complied with, and until such time as the manufacture has produced a sufficient supply to meet racer demands.

E. For non-OEM electrical or electronic parts, the manufacturer must follow the same rules as specified as the motor manufacturer registration with respect to submission of specifications to the Chairman of the IHRA F1 Powerboat Series Technical Committee.

F. The IHRA F1 Powerboat Series Technical Committee reserves the right to retain all submitted electrical or electronic parts for a one-year period.

PROMOTIONAL RIDES IN TWO SEAT BOATS

It is recognized that promotion of the IHRA F1 Powerboat Series and inclusion of future participants benefit from providing rides at IHRA F1 Powerboat Series events.

The Referee at any such event will apply the following rules to these rides.

1. All passengers (riders) must be members of IHRA non racing members.

2. All participants, including passengers (riders) must sign an the IHRA Insurance Waiver and Release Form.

3. All drivers of IHRA F1 Powerboat Series Classes shall be approved, experienced drivers who have previously held a powerboat competition license or participated in an approved powerboat competition event in the current or previous year. All riders and drivers must specifically be approved by the Referee at the event.

4. The minimum age for all passengers or riders must be at least 16 years of age, verified with proper identification.

5. Participants under 18 years of age must have a parent or legal guardian sign any and all required IHRA and/or track waivers and any other forms applicable to minors as required by IHRA. All participants under the age of 18 are required to submit a copy of their birth certificate or legal driver's license when applying for membership and/or at their first race of the calendar year. Any attempt to alter or falsify birth certificates will result in a one-year suspension, with all points and titles revoked. IHRA and any event organizers reserve the right to verify age through third-party services if necessary.

6. No boat shall be allowed to carry a passenger (rider) that does not have a designated seat for the passenger.

7. All passengers/riders shall receive basic training on the safety gear worn and what to expect in the event of an incident.

9. The number of passenger rides given during an event shall be predetermined in advance between the Referee and Regatta chairman.

10. All Promotional rides will be separate and distinct from regular regatta participation and will not run with any class other than promotional rides.

11. The Referee will discuss top speed with the drivers based on weather conditions, driver's experience and the course layout.

LIVE STREAMING COVERAGE

Live streamed racing video coverage throughout each event will include the F1 category along with support classes. Included within our live coverage will be a short program at the conclusion of each event with our podium finishers giving our fans insight directly from the driver's seat.

Driver interviews, educational pieces, along with entertaining clips to enhance our program. Live timing will be incorporated in classes using the TSCM System.

ONBOARD VIDEO CAMERA FOOTAGE

We are asking for all teams in all classes to assist us with your on-board video footage this season to streamline the collection of the footage that will provide excellent content for use on our shows. Your provided footage will give you the opportunity for it to be considered for use in the shows. The simple procedure is as follows.

*Any HD video cameras/systems are acceptable with the following standards.

*1080p minimum recording resolution.

*All cameras should be marked with the boat number in case of detachment.

*3 sufficient memory cards of 16GB or higher per boat marked with identifying information of Boat #, Class, T (testing), Q (qualifying), F

(final).

*Before all the on-water session the properly designated memory card should have any previous files deleted and then installed in the camera.

*Following all the on-water sessions each team has 1 hour to turn in the card at the series support trailer. Cards can be downloaded by the teams prior to turning in the cards. Cards will be downloaded and returned, returning of the cards may not be until the next day or event.

*Designated staff member will come and pick up the cards.

DRIVER MEDIA DATA SHEET

We need your information, if you want more coverage for your team and sponsors on all of our Livestream videos, promotional Gan guides, Website, and Social Media filling out this form is a must. We can't promote you without your help! It's as simple as filling out the Driver/Team Biography form on the website and returning it as soon as possible, go online to www.f1powerboatchampionship.com under Drivers,

Driver Info Form (http://f1powerboatchampionship.com/driver-info/). Click Submit, It's that easy.

DATA ACQUISITION AND TELEMETRY REGULATIONS

These rules are primarily designed to ensure fair competition and technical compliance.

1. Data Transmission Prohibition
    - 1.1 During a sanctioned event, teams may not upload or download any data to or from the vessel while it is competing.
    - 1.2 No data transmission of any kind is permitted during competition, whether wired or wireless.
    - 1.3 Driver-to-crew voice communication is permitted.
2. Data Logging – General Use
    - 2.1 Data loggers may be used solely for data collection purposes.
    - 2.2 Logged data may only be accessed when the vessel is stationary and not competing.
    - 2.3 During competition, no data may be downloaded, except as specifically permitted in Section 3.
    - 2.4 No data may be uploaded to the vessel at any time while it is competing in a sanctioned event.
3. Permitted Data Download During Competition
    - 3.1 The only data that may be downloaded during competition is limited to:

    * Video * Engine RPM

    * Vessel speed * GPS location These data are permitted strictly for promotional purposes.

    - 3.2 The following data channels may also be downloaded solely to monitor system health and prevent catastrophic failure:

    * Engine oil pressure * Engine oil temperature * Gearbox oil pressure * Gearbox oil temperature * Engine water pressure * Engine water temperature * Exhaust gas temperature * Fuel flow

    - 3.3 No other data channels are permitted to be downloaded during competition.
4. Data Access and Scrutineering
    - 4.1 Any data logged during a sanctioned event may be examined by the Race Committee at any time.
    - 4.2 Teams must:

    * Provide full access to the data logger upon request * Provide a complete copy of all logged data when requested

    - 4.3 All data collected by the Race Committee will be:

    * Kept confidential * Not shared with any other team

5. Approved Data Logging Systems
    - 5.1 Only the following data logging systems are permitted for competition use.
    - 5.2 All loggers must be “silent on the bus” and have no active outputs.

    Approved systems:

    *AiM MXP, MXT, MXS (any screen size)

AiM RIO products are NOT permitted *AiM MyChron 3, 4, 4 2T, 5, 5 2T, 5S, 5S 2T, 6, 6 2T

*AiM EVO4s, EVO5 AiM Solo2 DL

*Alfano 6, 7 1T, 7 2T

*MoTeC L120, L180, C125, C127, C1212, C185, C187, C1812

MoTeC ECUs and Power Distribution Modules are NOT permitted

*Racepak G2X and G2X Pro *OEM-provided and installed data loggers as listed in the applicable homologation sheets *IHRA F1 Powerboat Series–supplied data loggers for specific scrutineering purposes

6. Logger Configuration and Connectivity

6.1 Data logging systems must be configured to receive data only ("silent on bus").

6.2 No Wi-Fi or wireless connections are permitted.

6.3 Passwords for any data logging system must be supplied to an IHRA official upon request.

6.4 Loggers must be configured to capture the entire race session.

6.5 Logging must begin automatically when either of the following thresholds is met:

* ≥ 500 RPM, or
*≥ 5 mph vessel speed

7. Control Systems and Automation

7.1 All onboard systems must be controlled exclusively by the onboard human driver.

7.2 Any form of remote control of onboard systems during competition is strictly prohibited, except for race committee–approved safety systems.

7.3 This prohibition includes, but is not limited to:

* ECU operations * Hydraulic or electric actuators * Relays or devices triggered by digital outputs or software-controlled CAN signals

7.4 Systems used only for monitoring engine and drivetrain health are permitted.

7.5 Active outputs, feedback systems, or automated control systems that operate without direct human input are prohibited.

8. ECU Requirements

8.1 ECU hardware, software, and firmware must be:

* Exactly as installed by the engine manufacturer
* Unmodified

8.2 All ECU software and firmware versions must be:

- Approved

- Identifiable by version number
- Available for inspection upon request

9. Penalties

9.1 Any violation of these regulations will result in immediate disqualification.

10. Rule Amendments

10.1 These regulations may be modified at any time by the IHRA F1 Powerboat Series.